SOUTH VALLEY WATER RECLAMATION FACILITY

WEST JORDAN, UTAH

2022 VFD REPLACEMENT PROJECT

CLIENT PROJECT NO. 201238

ADDENDUM NO. 1

TO THE

PROCUREMENT SUBMITTAL

SEPTEMBER 28, 2022

Digitally signed by Christopher Alan Carvalho
Contact Info: Carollo Engineers, Inc.
Date: 2022.09.28 17:34:52 00'00'

REGISTERED PROFESSIONAL ENGINEER
No. 366286
CHRISTOPHER A. CARVALHO
STATE OF UTAH

7090 SOUTH UNION PARK AVENUE, SUITE 600 • SALT LAKE CITY, UTAH 84047 • P. 801.233.2500 • F. 801.233.2501

Bidders on the above-named project are hereby notified that the Bidding Documents are modified as indicated below. Bidders are required to acknowledge receipt of this Addendum in the space provided on the Document 00416 - Bid Form.

This Addendum shall become part of the Contract and provisions of the Contract apply.

SPECIFICATIONS

The following specifications are modified as indicated below.

1. No changes.

DRAWINGS

The following drawings are modified as indicated below.

The following drawings are replaced with attached revisions. The only change to these drawings is addition of the Engineer's signature:

1. G01.
2. GE01.
3. GE02.
4. GE-OL-HW-01.
5. GE-OL-RW-01.
6. GE-OL-RW-02.
7. GE-OL-RW-03.
8. GE-OL-RW-04.
9. GE-OL-RW-05.
10. GE-OL-RW-06.
11. 1E-01.
12. 14E-02.
13. 17E-02.
14. GN05.
15. PI-0001.
16. IS-01.
17. IS-02.
18. IS-03.

The following drawings are replaced with attached revisions as indicated below:

1. G02.
2. G03.

3. GE-OL-HW-02.
4. GE-OL-HW-03.

The following drawing are added with the attached as indicated below.

1. GE-OL-HW-05.
2. GE-OL-HW-06.
3. GE-OL-HW-07.
4. GE-OL-SP-01.
5. GE-OL-SP-02.
6. GE-OL-SP-03.
7. GE-OL-SP-04.
8. 10E-01.
9. IS-04.

South Valley Water Reclamation Facility

Drawings for the Construction of

2022 VFD REPLACEMENT PROJECT

September 2022
VOLUME 2

VFD PROCUREMENT PACKAGE

REV	DATE	BY	DESCRIPTION
1	9-28-22	CAC	ADDENDUM NO. 1

DESIGNED TLM
DRAWN TLM
CHECKED CLL
DATE SEPTEMBER 2022

Digitally signed by Christopher A Carvalho
Contact Info: christopher@carollo.com
Date: 2022.09.28 14:08:42 -06'00'
REGISTERED PROFESSIONAL ENGINEER No. 366286 CHRISTOPHER A CARVALHO STATE OF UTAH

carollo

South Valley WATER RECLAMATION FACILITY
7495 South 1300 West
West Jordan, Utah 84084

SOUTH VALLEY WATER RECLAMATION
2022 VFD REPLACEMENT
GENERAL
COVER SHEET

VERIFY SCALES
BAR IS ONE INCH ON ORIGINAL DRAWING
0 1"
IF NOT ONE INCH ON THIS SHEET, ADJUST SCALES ACCORDINGLY

JOB NO. 201238
DRAWING NO. G01
SHEET NO.
SHT OF

LAST SAVED BY: avates
PROJECT NO.
FILE NAME: 00G01.dwg

ELECTRICAL PLAN SYMBOLS

IDENTIFICATION SYMBOLS

EQUIP # — EQUIPMENT AND INSTRUMENT IDENTIFICATION

EQUIPMENT/INSTRUMENT LOCATOR

LUMINAIRE IDENTIFICATION
- a = CIRCUIT DESIGNATION
- b = DEVICE SWITCHED FROM
- c = MOUNTING HEIGHT IN FEET TO BOTTOM OF FIXTURE
- X = LUMINAIRE TYPE, REFER TO THE LUMINAIRE SCHEDULE

XXXX — CONDUIT IDENTIFICATION
XXXX = CONDUIT NUMBER, REFER TO CONDUIT SCHEDULE
UNLESS OTHERWISE NOTED, GROUPED CONDUITS ARE LABELED LEFT TO RIGHT OR TOP TO BOTTOM.

INDICATES KEYNOTE X (PERTAINS ONLY TO SHEET WHERE NOTE IS FOUND)

DISCONNECT SWITCH
A = TYPE, REFER TO DISCONNECT SCHEDULE

CAMERA

LUMINAIRES

LINEAR FIXTURE

2' X 2' LAY-IN TROFFER

2' X 4' LAY-IN TROFFER

LUMINAIRE POLE MOUNTED

GO/NO-GO PANEL - STROBE AND HORN
- R = RED LIGHT
- G = GREEN LIGHT
- H = HORN

GO/NO-GO PANEL - SOLID

GO/NO-GO PANEL - STROBE

LUMINAIRE, EMERGENCY BATTERY-POWERED

LUMINAIRE, EMERGENCY/EXIT BATTERY-POWERED

LUMINAIRE, EMERGENCY BATTERY-POWERED REMOTE

LUMINAIRE, SURFACE OR PENDANT MOUNTED

LUMINAIRE, WALL MOUNTED

LUMINAIRE, FLOOD/SPOT

LUMINAIRE, EXIT ONE OR TWO FACES AS INDICATED. ARROW POINTS IN DIRECTION OF EGRESS.

SWITCHES/RECEPTACLES

SINGLE POLE SWITCH
- a = CIRCUIT DESIGNATION
- b = DEVICE SWITCHED DESIGNATION
- c = TYPE
  - 2 = DOUBLE POLE SWITCH
  - 3 = THREE-WAY SWITCH
  - 3P = THREE POSITION SWITCH
  - 4 = FOUR-WAY SWITCH
  - K = KEY OPERATED SWITCH
  - F = SWITCH AND FUSESTAT HOLDER
  - P = SWITCH AND PILOT LIGHT
  - T = THERMOSTAT
  - D = DIMMER SWITCH
  - L = LOW VOLTAGE LIGHT SWITCH
  - M = MANUAL MOTOR STARTER
  - N = NETWORKED SINGLE OR MULTIPLE SWITCH LOCATIONS

REFER TO ABBREVIATIONS LEGEND FOR ALL OTHER DESIGNATIONS.

OCCUPANCY SENSOR
- *REFERENCE LIGHTING CONTROL COMPONENT SCHEDULE
- a = CIRCUIT DESIGNATION
- b = DEVICE SWITCHED DESIGNATION
- c = MOUNTING HEIGHT IN FEET TO BOTTOM OF SENSOR

PE — PHOTOCELL

SWITCH AND SINGLE RECEPTACLE
- a = CIRCUIT DESIGNATION
- b = DEVICE TYPE DESIGNATION

DUPLEX RECEPTACLE

QUADRUPLEX RECEPTACLE

IN FLOOR DUPLEX RECEPTACLE

IN FLOOR QUADRUPLEX RECEPTACLE

DUPLEX RECEPTACLE w/SPLIT WIRE

DEDICATED RECEPTACLE

SPECIAL PURPOSE RECEPTACLE

WELDING RECEPTACLE
- a = CIRCUIT DESIGNATION
- b = DISCONNECT TYPE

TWIST LOCK RECEPTACLE
- a = AMP RATING

TELEPHONE OUTLET
- a = CIRCUIT DESIGNATION
- b = MOUNTING HEIGHT

DATA COMMUNICATIONS OUTLET
- a = CIRCUIT DESIGNATION
- b = MOUNTING HEIGHT

FIRE ALARM

SMOKE DETECTOR
- a = TYPE
- I = IONIZATION
- P = PHOTOELECTRIC
- d = DUCT DETECTOR

FACP — FIRE ALARM CONTROL PANEL

F — FIRE ALARM PULL STATION

FIRE ALARM HORN/STROBE COMBINATION

FIRE ALARM STROBE

FIRE SPRINKLER
- F = FLOW SWITCH
- T = TAMPER SWITCH

RACEWAY

EXPOSED CONDUIT

BREAK AND CONTINUATION IN CONDUIT RUN

EXPOSED CONDUIT HIDDEN BEHIND WALLS, FLOORS OR OTHER STRUCTURES

UNDERGROUND CONDUIT, DIRECT BURIED OR IN DUCT BANK

CONDUIT IN SLAB

CONDUIT VERTICAL CHANGE IN DIRECTION

CONDUIT CAP

J — JUNCTION BOX

CONDUIT SEAL

CONDUIT TEE

DUCT BANK

APPROXIMATE DIMENSIONS SHOWN ON DUCT BANK SECTIONS

CONDUIT SIZE AND CONDUCTORS

INDIVIDUAL CONDUCTORS

W"C-(3-X (Ø), 1-Y (N) & 1-Z (G))

W"C (WHERE INDICATED): W = CONDUIT TRADE SIZE

3-X (Ø):
- 3 = QUANTITY
- X = SIZE OF CONDUCTORS
- (Ø) = DESIGNATES PHASE CONDUCTORS

1-Y (N) (WHERE INDICATED):
- 1 = QUANTITY
- Y = SIZE OF CONDUCTORS
- (N) = DESIGNATES NEUTRAL CONDUCTORS

1-Z (G) (WHERE INDICATED):
- 1 = QUANTITY
- Z = SIZE OF CONDUCTORS
- (G) = DESIGNATES GROUND CONDUCTORS

U{3-X (Ø) & 1-X (G)}
- U = NUMBER OF PARALLEL RUNS

VFD CONDUCTORS

U{[N/C-X (Ø) & INTEGRAL (G)]:VFD}
- U = NUMBER OF PARALLEL RUNS
- N/C = NUMBER OF PHASE CONDUCTORS IN CABLE
- X = SIZE OF CONDUCTORS
- VFD = VFD CABLE

MULTI CONDUCTOR CABLES

K/2/C#16S
K (WHERE INDICATED) = NUMBER OF PAIRS
2/C#16S = TWO CONDUCTOR, 16 GAUGE, TWISTED SHIELDED PAIR

K/3/C#16S
K (WHERE INDICATED) = NUMBER OF TRIPLETS
3/C#16S = THREE CONDUCTOR, 16 GAUGE, TWISTED SHIELDED TRIPLETS

U{[N/C-X (Ø) & INTEGRAL (G)]:MC}
- U = NUMBER OF PARALLEL RUNS
- MC = MULTICONDUCTOR CABLE
- N/C = NUMBER OF PHASE CONDUCTORS IN THE CABLE
- X = SIZE OF CONDUCTORS

FIBER OPTIC CABLES

FO/N
- N = NUMBER OF INDIVIDUAL FIBERS

GROUNDING

UNDERGROUND GROUND CABLE #4/0 SDBC UNLESS OTHERWISE NOTED

GROUND ROD

GROUND ROD AND GROUND WELL

ELECTRICAL ONE-LINE SYMBOLS

MEDIUM VOLTAGE

CIRCUIT BREAKER, MEDIUM VOLTAGE
- a = CIRCUIT BREAKER NUMBER
- b = FRAME SIZE

ANSI RELAY DEVICE
- a = ANSI DEVICE FUNCTION
- b = QUANTITY

MEDIUM VOLTAGE DISCONNECT SWITCH NON-FUSED CUT OUT

MEDIUM VOLTAGE DISCONNECTING FUSE SINGLE FUSE CUT OUT

MEDIUM VOLTAGE DISCONNECTING FUSE DOUBLE FUSE CUT OUT

MEDIUM VOLTAGE SINGLE FUSE

MEDIUM VOLTAGE DOUBLE FUSE

MEDIUM VOLTAGE LIVE FRONT TERMINATOR

MEDIUM VOLTAGE ELBOW

MEDIUM VOLTAGE TEE

MEDIUM VOLTAGE CONTACTOR

MEDIUM VOLTAGE STARTER

MOV-ELBOW ARRESTER

LOW VOLTAGE

LOW VOLTAGE CIRCUIT BREAKER
- a = TYPE
  - MCP = MOTOR CIRCUIT PROTECTOR
  - TM = THERMAL MAGNETIC
  - SS = SOLID STATE
- b = FRAME SIZE (MANUFACTURER TO DETERMINE FRAME SIZE UNLESS INDICATED)
- c = NUMBER OF POLES
- d = TRIP SETTING (AT = AMP TRIP) (AC = MCP CONTINUOUS RATING)
- e = DESIGNATION
- f = INTERRUPTING RATING

LOW VOLTAGE CIRCUIT BREAKER AUXILIARY OPERATOR
- * = S = SHUNT TRIP
- = G = GROUND FAULT INTERRUPTER
- = V = SOLENOID KEY RELEASE

DISCONNECT SWITCH
- A = TYPE, REFER TO DISCONNECT SCHEDULE

FUSED DISCONNECT SWITCH
- B = TYPE, REFER TO DISCONNECT SCHEDULE
- b = FUSE RATING

FUSE

COMBINATION STARTER WITH CONTROL POWER TRANSFORMER
- a = CIRCUIT BREAKER DISCONNECT, TYPE AS NOTED
- b = STARTER TYPE REFER TO THE SPECIFICATIONS FOR STARTER DEFINITIONS.
- c = NEMA STARTER SIZE
- d = OVERLOAD

MOTOR STARTER/DRIVES:
- a = DEVICE TYPE
  - VFD-6 = 6-PULSE VFD
  - VFD-18 = 18-PULSE VFD
  - VFD-RH = REDUCED HARMONIC VFD (18-PULSE OR ACTIVE FRONT END AS DEFINED IN THE SPECIFICATIONS)
  - RVSS = REDUCED VOLTAGE SOLID STATE STARTER
  - RVAT = REDUCED VOLTAGE AUTO TRANSFORMER
  - a/B = DEVICE WITH BYPASS STARTER. REFER TO THE SPECIFICATIONS
- b = INPUT OPTIONS
  - LL = LINE REACTOR
  - PHF = PASSIVE HARMONIC FILTER
- c = OUTPUT OPTIONS
  - LR = LOAD REACTOR
  - DV/DT = Dv/dt FILTER
  - SWF = SINE WAVE FILTER

EQUIPMENT ENCLOSURE

MISCELLANEOUS

HP — MOTOR
HP = HORSEPOWER RATING
FULL LOAD AMPS AS NOTED

PACKAGED EQUIPMENT LOAD RATING AS INDICATED
- a = RATED LOAD
- b = UNIT(HP, KW, KVA) AS INDICATED

TRANSFORMER
- a = DEVICE I.D.
- b = KVA RATING
- c = NUMBER OF PHASES
- d = PRIMARY VOLTAGE
- e = SECONDARY VOLTAGE
- f,g = CONNECTION TYPE SYMBOL
- h = IMPEDANCE

GROUNDED WYE CONNECTION

DELTA CONNECTION

G — ENGINE-GENERATOR RATINGS AS INDICATED ON THE DRAWINGS
- a = KVA/KW
- b = VOLTAGE/CONNECTION
- c = PHASE
- d = WIRE
- e = PF

CURRENT TRANSFORMER WITH SHORTING TERMINAL BLOCK
- a = QUANTITY
- b = RATIO

POTENTIAL TRANSFORMER
- a = QUANTITY
- b = RATIO
- c,d = CONNECTION TYPE SYMBOL

SSM — SOLID STATE MULTIFUNCTION METER

ATP — AMPERE TEST POINT

VTP — VOLTAGE TEST POINT

UTILITY METER

LIGHTNING ARRESTER

SPD — SURGE PROTECTIVE DEVICE

DRAWOUT CONNECTION

GROUND

CAPACITOR

BATTERY

K — KIRK KEY INTERLOCK

LOAD BANK

REV	DATE	BY	DESCRIPTION
1	9-28-22	CAC	ADDENDUM NO. 1

DESIGNED CE
DRAWN CE
CHECKED CLL
DATE SEPTEMBER 2022

Digitally signed by Christopher A Carvalho
Contact Info: carvalho@carollo.com
Date: 2022.09.28 14:37:42 -06'00'

REGISTERED PROFESSIONAL ENGINEER — No. 366286 — CHRISTOPHER A CARVALHO — STATE OF UTAH

carollo

South Valley WATER RECLAMATION FACILITY
7495 South 1300 West
West Jordan, Utah 84084

SOUTH VALLEY WATER RECLAMATION
2022 VFD REPLACEMENT
ELECTRICAL
ELECTRICAL LEGEND

VERIFY SCALES
BAR IS ONE INCH ON ORIGINAL DRAWING
0 — 1"
IF NOT ONE INCH ON THIS SHEET, ADJUST SCALES ACCORDINGLY

JOB NO. 201238
DRAWING NO. GE01
SHEET NO. SHT OF

LAST SAVED BY: tmorabito
PROJECT NO.
FILE NAME: GE01.dwg

ABBREVIATIONS

A	AMP
ABS	ABSOLUTE
AC	ALTERNATING CURRENT
ACK	ACKNOWLEDGE
ACTR	ACTUATOR
AF	AMP FRAME
AFC	AUTOMATIC FREQUENCY CONTROL
AIC	AMP INTERRUPTING CAPACITY
AM	AMMETER
ANN	ANNUNCIATOR
ANT	ANTENNA
APU	AUXILIARY POWER UNIT
ARM	ARMORED CABLE
AS	AMMETER SWITCH
ASYM	ASYMMETRICAL
AT	AMP TRIP
ATO	AUTOMATIC THROW OVER
ATP	AMMETER TEST POINT
ATS	AUTOMATIC TRANSFER SWITCH
AUTO XFMR	AUTOMATIC TRANSFORMER
AUX	AUXILIARY
AWG	AMERICAN WIRE GAGE
B	BELL
BAT	BATTERY
BFG	BELOW FINISHED GRADE
BHP	BRAKE HORSEPOWER
BKR	BREAKER
BRF	BELOW RAISED FLOOR
C	CONDUIT / CONTINUOUS LOAD
CB	CIRCUIT BREAKER
CCTV	CLOSED CIRCUIT TELEVISION
CCW	COUNTER CLOCKWISE
CKT	CIRCUIT
COAX	COAXIAL CABLE
COM	COMMON
COMM	COMMUNICATION
CPT	CONTROL POWER TRANSFORMER
CR	CONTROLLED RECEPTACLE
CS	CONTROL SWITCH
CT	CURRENT TRANSFORMER
CV	CONTROL VALVE
CW	CLOCKWISE / COOL WHITE
DC	DIRECT CURRENT
DCS	DISTRIBUTED CONTROL SYSTEM
DCU - X	DISTRIBUTED CONTROL UNIT NO. X
DEMO	DEMOLITION
DISC	DISCONNECT SWITCH
DM	DEMAND METER
DPDT	DOUBLE POLE DOUBLE THROW
DPST	DOUBLE POLE SINGLE THROW
DS	DOOR SWITCH
E/G	EMERGENCY GENERATOR
EM	EMERGENCY
EMT	ELECTRICAL METALLIC TUBING
ENCL	ENCLOSURE
ENG	ENGINE
ENT	ELECTRICAL NON-METALLIC TUBING
EP	EXPLOSION PROOF
ETM	ELAPSED TIME METER
F	SUB-FED
FA	FIRE ALARM
FACP	FIRE ALARM CONTROL PANEL
FDR	FEEDER
FLA	FULL LOAD AMPS
FLX	FLEXIBLE CONDUIT
FO	FIBER OPTIC
FRC	FIBERGLASS RIGID CONDUIT
FREQ	FREQUENCY
FU	FUSE
FU	SW FUSED SWITCH
FVNR	FULL VOLTAGE NON-REVERSING
FVR	FULL VOLTAGE REVERSING
FWD	FORWARD
G	GROUND / EQUIPMENT GROUND / GROUND FAULT
GEN	GENERATOR
GRC	GALVANIZED STEEL RIGID CONDUIT
GFCI	GROUND FAULT CIRCUIT INTERRUPTER (RECEPTACLE)
GFI	GROUND FAULT INTERRUPTER (BREAKER)
GFR	GROUND FAULT RELAY
H	HOT-LEG
HF	HIGH FREQUENCY
HP	HORSEPOWER
HPS	HIGH PRESSURE SODIUM
HR	HOUR
HSTAT	HUMIDISTAT
HV	HIGH VOLTAGE
HVAC	HEATING/VENTILATION/AIR CONDITIONING
HZ	HERTZ
I	INSTANTANEOUS / INTERMITTENT LOAD
IC	INTERRUPTING CAPACITY
IJB	INSTRUMENT JUNCTION BOX
IMC	INTERMEDIATE METAL CONDUIT
INST	INSTANTANEOUS
INT	INTERLOCK
INTERCOM	INTERCOMMUNICATION
J	JUNCTION BOX
K	KEY INTERLOCK
KA	KILOAMP
KV	KILOVOLT
KVA	KILOVOLT AMPERE
KVAR	KILOVAR (REACTANCE)
KW	KILOWATT
KWD	KILOWATT DEMAND
KWH	KILOWATT HOUR
L	LONG-TIME
L-B	LINE-BUS
L-G	LINE-GROUND
LA	LIGHTNING ARRESTOR
LBL	LABEL
LC	LIGHTING CONTACT OR
LCP- X	LOCAL CONTROL PANEL NO. X
LL	LEAD-LAG LOAD REACTOR
LP	LIGHT POLE
LP - X	LIGHTING PANEL NO. X
LTG	LIGHTING
LV	LOW VOLTAGE
LVL	LEVEL
M-X	MOTOR CONTROLLER NO. X
MA	MILLIAMPERE
MCA	MOTOR CIRCUIT AMPS
MCC - X	MOTOR CONTROL CENTER NO. X
MCP	MOTOR CIRCUIT PROTECTOR
MH	MANHOLE / MOUNTING HEIGHT
MLO	MAIN LUGS ONLY
MOD	MOTOR OPERATED DAMPER
MOV	METAL OXIDE VARISTOR
MPR	MOTOR PROTECTION RELAY
MS-X	MOTOR STARTER NO. X
MSP	MOTOR STARTING PANEL
MTO	MANUAL THROW OVER
MTR-X	MOTOR NO. X
MTS	MANUAL TRANSFER SWITCH
MV	MEGAVOLT
MVA	MEGAVOLT-AMPERES
MVS	MEDIUM VOLTAGE SWITCH
MW	MEGAWATT
N	NEUTRAL
NC	NORMALLY CLOSED
NEC	NATIONAL ELECTRICAL CODE
NFC	NONMETALLIC FLEXIBLE CONDUIT
NL	NIGHT LIGHT
NO	NORMALLY OPEN
NP	NAMEPLATE
O	OPEN OR OPENED
OH	OVERHEAD
OL	OVERLOAD RELAY
P	POLE
PA	PUBLIC ADDRESS
PB	PUSHBUTTON / PULL BOX
PCS	PVC COATED GALVANIZED STEEL CONDUIT
PCM	PROCESS CONTROL MODULE
PE	PHOTOCELL
PF	POWER FACTOR
PFCC	POWER FACTOR CORRECTION CAPACITOR
PFR	PHASE FAILURE RELAY
PH	PHASE
PNL	PANEL
PPX	POWER PANEL NO. X
PRI	PRIMARY
PT	POTENTIAL TRANSFORMER
PVC	POLYVINYL CHLORIDE RIGID PLASTIC CONDUIT
PWR	POWER
RAC	RIGID ALUMINUM CONDUIT
RECPT	RECEPTACLE
REV	REVERSE
RF	RADIO FREQUENCY
RMS	ROOT MEAN SQUARED
RVAT	REDUCED VOLTAGE AUTO TRANSFORMER
RVNR	REDUCED VOLTAGE NON-REVERSING
RVSS	REDUCED VOLTAGE SOLID STATE
S	SHIELD / SHORT-TIME
SA	SURGE ARRESTER
SC	SHORT CIRCUIT
SDBC	SOFT DRAWN BARE COPPER
SFL	SUB FEED LUGS
SLT	SEALTIGHT LIQUIDTIGHT FLEXIBLE CONDUIT
SM	SURFACE MOUNTED
SP	SINGLE POLE
SPD	SURGE PROTECTIVE DEVICE
SPDT	SINGLE POLE DOUBLE THROW
SPST	SINGLE POLE SINGLE THROW
SPKR	SPEAKER
SS	SOLID STATE
STB	SHORTING TERMINAL BLOCK
SW	SWITCH
SWBD	SWITCHBOARD
SWGR	SWITCHGEAR
SYM	SYMMETRICAL
TACH	TACHOMETER
TB - X	TERMINAL BLOCK - UNIT X
TC	THERMOCOUPLE / TIME CLOCK / TRAY CABLE
TD	TEMPERATURE DETECTOR RELAY
TE	TOTALLY ENCLOSED
TEFC	TOTALLY ENCLOSED FAN COOLED
TENV	TOTALLY ENCLOSED NON-VENTILATED
TERM	TERMINAL
TJB	TERMINAL JUNCTION BOX
TM	THERMAL MAGNETIC
TP	TWISTED PAIR
TS	TEMPERATURE SWITCH
TS1W	TWO SPEED CONSEQUENT POLE, ONE WINDING
TS2W	TWO SPEED SEPARATE WINDING
TSTAT	THERMOSTAT
UHF	ULTRA HIGH FREQUENCY
UNG	UNGROUNDED
UPS	UNINTERRUPTIBLE POWER SUPPLY
UVR	UNDER VOLTAGE RELAY
V	VOLT
VA	VOLT AMPERE
VAR	VARMETER
VCP	VENDOR CONTROL PANEL
VFD	VARIABLE FREQUENCY DRIVE
VHF	VERY HIGH FREQUENCY
VM	VOLTMETER
VP	VAPORPROOF
VR	VOLTAGE REGULATOR
VS	VOLTAGE SWITCH
VT	VOLTAGE TRANSFORMER
VTP	VOLTAGE TEST POINT
W	WATT / WEST
WT	WATER TIGHT
WP	WEATHER PROOF
XFMR	TRANSFORMER

NOTES:

1. REFER TO SPECIFICATIONS AND OTHER DRAWINGS FOR ADDITIONAL ABBREVIATIONS.

POWER DEVICE FUNCTION NUMBERS

1	MASTER ELEMENT
2	TIME-DELAY STARTING OR CLOSING RELAY
3	CHECKING OR INTERLOCKING RELAY
4	MASTER CONTACTOR
5	STOPPING DEVICE
6	STARTING CIRCUIT BREAKER
7	ANODE CIRCUIT BREAKER
8	CONTROL POWER DISCONNECTING DEVICE
9	REVERSING DEVICE
10	UNIT SEQUENCE SWITCH
11	MULTIFUNCTION DEVICE
12	OVER-SPEED DEVICE
13	SYNCHRONOUS-SPEED DEVICE
14	UNDER-SPEED DEVICE
15	SPEED OR FREQUENCY MATCHING DEVICE
16	DATA COMMUNICATIONS DEVICE
17	SHUNTING OR DISCHARGE SWITCH
18	ACCELERATING OR DECELERATING DEVICE
19	STARTING-TO-RUNNING TRANSITION CONTACTOR
20	ELECTRICALLY OPERATED VALVE
21	DISTANCE RELAY
22	EQUALIZER CIRCUIT BREAKER
23	TEMPERATURE CONTROL DEVICE
24	VOLTS PER HERTZ RELAY
25	SYNCHRONIZING OR SYNCHRONISM-CHECK DEVICE
26	APPARATUS THERMAL DEVICE
27	UNDERVOLTAGE RELAY
27N	GROUND FAULT UNDERVOLTAGE RELAY
28	FLAME DETECTOR
29	ISOLATING CONTACTOR
30	ANNUNCIATOR RELAY
31	SEPARATE EXCITATION DEVICE
32	DIRECTIONAL POWER RELAY
33	POSITION SWITCH
34	MASTER SEQUENCE DEVICE
35	BRUSH-OPERATING OR SLIP-RING SHORT-CIRCUITING DEVICE
36	POLARITY DEVICE
37	UNDERCURRENT OR UNDERPOWER RELAY
38	BEARING PROTECTIVE DEVICE
39	MECHANICAL CONDITION MONITOR
40	FIELD RELAY
41	FIELD CIRCUIT BREAKER
42	RUNNING CIRCUIT BREAKER
43	MANUAL TRANSFER OR SELECTOR DEVICE
44	UNIT SEQUENCE STARTING RELAY
45	ABNORMAL ATMOSPHERIC CONDITION MONITOR
46	REVERSE-PHASE OR BALANCE CURRENT RELAY
47	PHASE-BALANCE OR PHASE-SEQUENCE VOLTAGE RELAY
48	INCOMPLETE SEQUENCE RELAY
49	MACHINE OR TRANSFORMER THERMAL RELAY
50	INSTANTANEOUS OVERCURRENT RELAY
51	AC TIME OVERCURRENT RELAY
52	AC CIRCUIT BREAKER
53	FIELD EXCITATION RELAY
54	TURNING GEAR ENGAGING DEVICE
55	POWER FACTOR RELAY
56	FIELD APPLICATION RELAY
57	SHORT-CIRCUITING OR GROUNDING DEVICE
58	RECTIFICATION FAILURE RELAY
59	OVERVOLTAGE RELAY
60	VOLTAGE OR CURRENT BALANCE RELAY
61	DENSITY SWITCH OR SENSOR
62	TIME-DELAY STOPPING OR OPENING RELAY
63	PRESSURE SWITCH
64	GROUND DETECTOR RELAY
65	GOVERNOR
66	NOTCHING OR JOGGING DEVICE
67	AC DIRECTIONAL OVERCURRENT RELAY
68	BLOCKING OR OUT OF STEP RELAY
69	PERMISSIVE CONTROL DEVICE
70	RHEOSTAT
71	LIQUID LEVEL SWITCH
72	DC CIRCUIT BREAKER
73	LOAD-RESISTOR CONTACTOR
74	ALARM RELAY
75	POSITION CHANGING MECHANISM
76	DC OVERCURRENT RELAY
77	TELEMETERING DEVICE
78	PHASE-ANGLE MEASURING RELAY
79	AC RECLOSING RELAY
80	FLOW SWITCH
81	FREQUENCY RELAY
82	DC LOAD MEASURING RECLOSING RELAY
83	AUTOMATIC SELECTIVE CONTROL OR TRANSFER RELAY
84	OPERATING MECHANISM
85	PILOT COMMUNICATIONS, CARRIER OR PILOT-WIRE RELAY
86	LOCKOUT RELAY
87	DIFFERENTIAL PROTECTIVE RELAY
88	AUXILIARY MOTOR OR MOTOR GENERATOR
89	LINE SWITCH
90	REGULATING DEVICE
91	VOLTAGE DIRECTIONAL RELAY
92	VOLTAGE AND POWER DIRECTIONAL RELAY
93	FIELD-CHANGING CONTACTOR
94	TRIPPING OR TRIP-FREE RELAY

COMMONLY USED SUFFIX LETTERS APPLIED TO POWER DEVICE FUNCTION NUMBERS

A	ALARM ONLY
B	BUS PROTECTION
G	GROUND FAULT PROTECTION (RELAY CT IN A SYSTEM NEUTRAL CIRCUIT OR GENERATOR PROTECTION)
GS	GROUND FAULT PROTECTION (RELAY CT IN TOROIDAL OR GROUND SENSOR TYPE)
L	LINE PROTECTION
M	MOTOR PROTECTION
N	GROUND FAULT PROTECTION (RELAY COIL CONNECTED IN RESIDUAL CT CIRCUIT)
T	TRANSFORMER PROTECTION
V	VOLTAGE
P	PHASE PROTECTION

ABBREVIATIONS

AFD	- ARC FLASH DETECTOR
CLK	- CLOCK OR TIMING SOURCE
DDR	- DYNAMIC DISTURBANCE RECORDER
DFR	- DIGITAL FAULT RECORDER
ENV	- ENVIRONMENTAL DATA
HIZ	- HIGH IMPEDANCE FAULT DETECTOR
HMI	- HUMAN MACHINE INTERFACE
HST	- HISTORIAN
LGC	- SCHEME LOGIC
MET	- SUBSTATION METERING
PDC	- PHASOR DATA CONCENTRATOR
PMU	- PHASOR MEASUREMENT UNIT
PQM	- POWER QUALITY MONITOR
RIO	- REMOTE I/O DEVICE
RTU	- REMOTE TELEMETRY UNIT/REMOTE TERMINAL UNIT
SER	- SEQUENCE OF EVENTS RECORDER
TCM	- TRIP CIRCUIT MONITOR

REV	DATE	BY	DESCRIPTION
1	9-28-22	CAC	ADDENDUM NO. 1

DESIGNED CE
DRAWN CE
CHECKED CLL
DATE SEPTEMBER 2022

Digitally signed by Christopher A Carvalho
Contact Info: ccarvalho@carollo.com
Date: 2022.09.28 14:37:00 -06'00'
REGISTERED PROFESSIONAL ENGINEER No. 366286 CHRISTOPHER A CARVALHO STATE OF UTAH

carollo

South Valley WATER RECLAMATION FACILITY
7495 South 1300 West
West Jordan, Utah 84084

SOUTH VALLEY WATER RECLAMATION
2022 VFD REPLACEMENT
ELECTRICAL
ELECTRICAL ABBREVIATIONS

VERIFY SCALES
BAR IS ONE INCH ON ORIGINAL DRAWING
0 1"
IF NOT ONE INCH ON THIS SHEET, ADJUST SCALES ACCORDINGLY

JOB NO. 201238
DRAWING NO. GE02
SHEET NO.
SHT OF

LAST SAVED BY: tmorabito
PROJECT NO.
FILE NAME: GE02.dwg

GENERAL NOTES:

1. ALL MCC MODIFICATIONS ARE BY OTHERS.
2. STANDBY POWER FROM DIESEL GENERATORS IS AVAILABLE TO ALL INFLUENT PUMP VFDS.

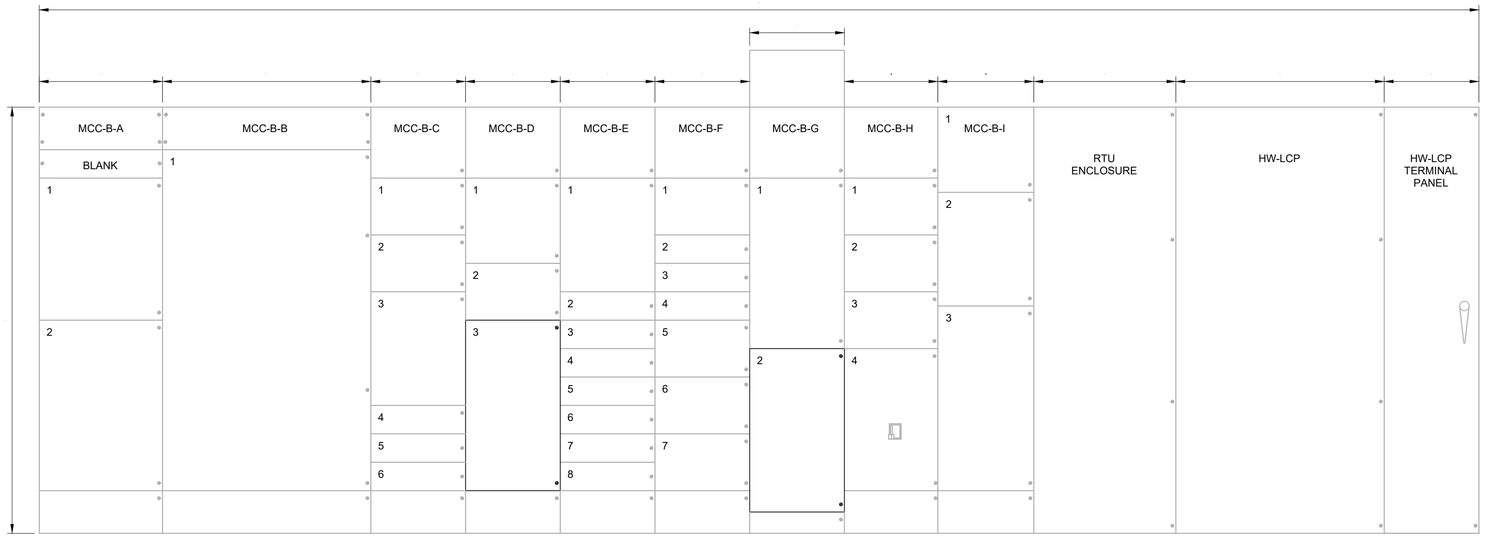

HW-MCC B ELEVATION & HW-LCP ELEVATION

SCALE: 3/4" = 1'-0"

A1 -SG-EDB-1
A2 -ES2-5

B1 -2000ATS

C1 -HW-P-8 -DEWATERING PUMP
C2 -HW-F-1
C3 -SPARE
C4 -SPARE
C5 -ROOF TOP -EVAP COOLER
C6 -SPARE

D1 -SPARE
D2 -HW-F-3 -FAN
D3 -HW-P-2

E1 -SPARE
E2 -SPARE
E3 -AIR COMPRESSOR
E4 -SPARE
E5 -PANEL SGB
E6 -HW-ME-19 -BRIDGE CRANE
E7 -O.H. DOOR -POLE LIGHT
E8 -PANEL LP-HW-2

F1 -SPACE
F2 -HW-P-9&10 -SUMP PUMPS
F3 -SURGE SUPPRESSER
F4 -HW-B-6 -AIR COMPRESSOR
F5 -HW-F-6 -FAN
F6 -HW-P-12 -CIRC. PUMP
F7 -HW-P-11 -CIRC. PUMP

G1 -CONTROL PANEL
G2 -HW-P-3

H1 -HW-P-101 -SEAL WATER
H2 -HW-P-102 -SEAL WATER
H3 -HW-F-4
H4 -HW-P-5

I1 -SPACE
I2 -HW-MCC-C FEEDER
I3 -SPACE
I1 -HW-MCC-C -SSCB-100%

REV	DATE	BY	DESCRIPTION
1	9-28-22	CAC	ADDENDUM NO. 1

DESIGNED CAC
DRAWN BLS
CHECKED CLL
DATE SEPTEMBER 2022

Digitally signed by Christopher A Carvalho
Contact Info: christopher@carollo.com
Date: 2022.09.28 14:08:42 -06'00'
REGISTERED PROFESSIONAL ENGINEER No. 366286 CHRISTOPHER A CARVALHO STATE OF UTAH

carollo

South Valley WATER RECLAMATION FACILITY
7495 South 1300 West
West Jordan, Utah 84084

SOUTH VALLEY WATER RECLAMATION
2022 VFD REPLACEMENT
ELECTRICAL
HW-MCC-B
REVISED ELEVATION

VERIFY SCALES
BAR IS ONE INCH ON ORIGINAL DRAWING
0 1"
IF NOT ONE INCH ON THIS SHEET, ADJUST SCALES ACCORDINGLY

JOB NO. 201238
DRAWING NO. GE-OL-HW-01
SHEET NO. OF 136

LAST SAVED BY: tmorabito

PROJECT NO. 201238-100000 FILE NAME: GE-OL-HW-01.dwg

GENERAL NOTES:

1. THE VFDS SHOWN HERE ARE GENERIC AND DO NOT INDICATE A PREFERENCE FOR ONE MANUFACTURER.
2. VFD INSTALLATION, RACEWAY AND WIRING AND MCC MODIFICATIONS ARE PROVIDED BY OTHERS.

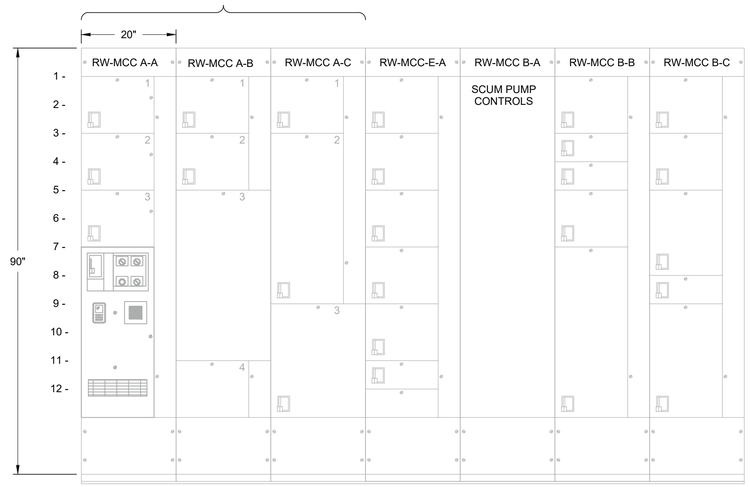

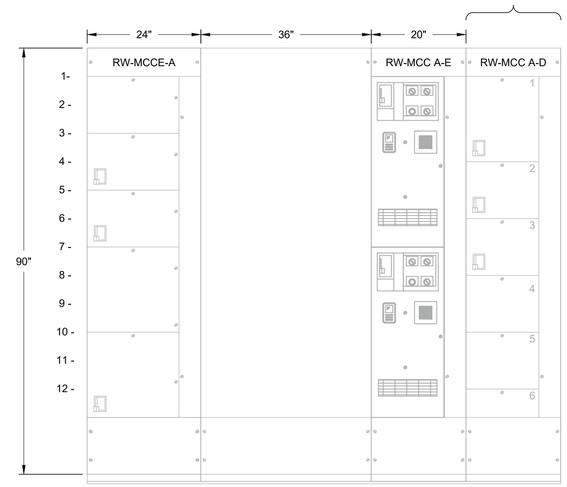

RW-MCC A ELEVATION

300A VERT. BUS

A1 - FAN RW-F-1

A2 - SCUM PUMP RW-P-10

A3 - SCUM PUMP RW-P-11

A4 - WAS PUMP PMP-1603

300A VERT. BUS

B1 - SCUM PUMP RW-MX-1

B2 - AUTO TRANSFER SWITCH FEEDER

B3 - AUTO TRANSFER SWITCH RW-ATS

B4 - FROM SG-EDB-5

600A VERT. BUS

C1 - RAS PUMP PMP-1403

C2 - RAS PUMP PMP-1402

C3 - MAIN FROM SUBSTATION ES3-2

E1 - WAS PUMP PMP-1601

E2 - WAS PUMP PMP-1602

D1 - SPARE

D2 - RAS PUMP PMP-1401

D3 - EDV-1610

D4 - SPACE

D5 - SPACE

D6 - INCOMING LINE

REV	DATE	BY	DESCRIPTION
1	9-28-22	CAC	ADDENDUM NO. 1

DESIGNED CAC
DRAWN BLS
CHECKED CLL
DATE SEPTEMBER 2022

Digitally signed by Christopher A Carvalho
Contact Info: carvalho@carollo.com
Date: 2022.09.28 14:37:42 -06'00'
REGISTERED PROFESSIONAL ENGINEER No. 366286 CHRISTOPHER A CARVALHO STATE OF UTAH

carollo

South Valley WATER RECLAMATION FACILITY
7495 South 1300 West
West Jordan, Utah 84084

SOUTH VALLEY WATER RECLAMATION
2022 VFD REPLACEMENT
ELECTRICAL
RW-MCC-A
REVISED ELEVATION

VERIFY SCALES
BAR IS ONE INCH ON ORIGINAL DRAWING
0 1"
IF NOT ONE INCH ON THIS SHEET, ADJUST SCALES ACCORDINGLY

JOB NO. 201238
DRAWING NO. GE-OL-RW-01
SHEET NO. OF 136

LAST SAVED BY: avates

PROJECT NO. 201238-100000 FILE NAME: GE-OL-RW-01.dwg

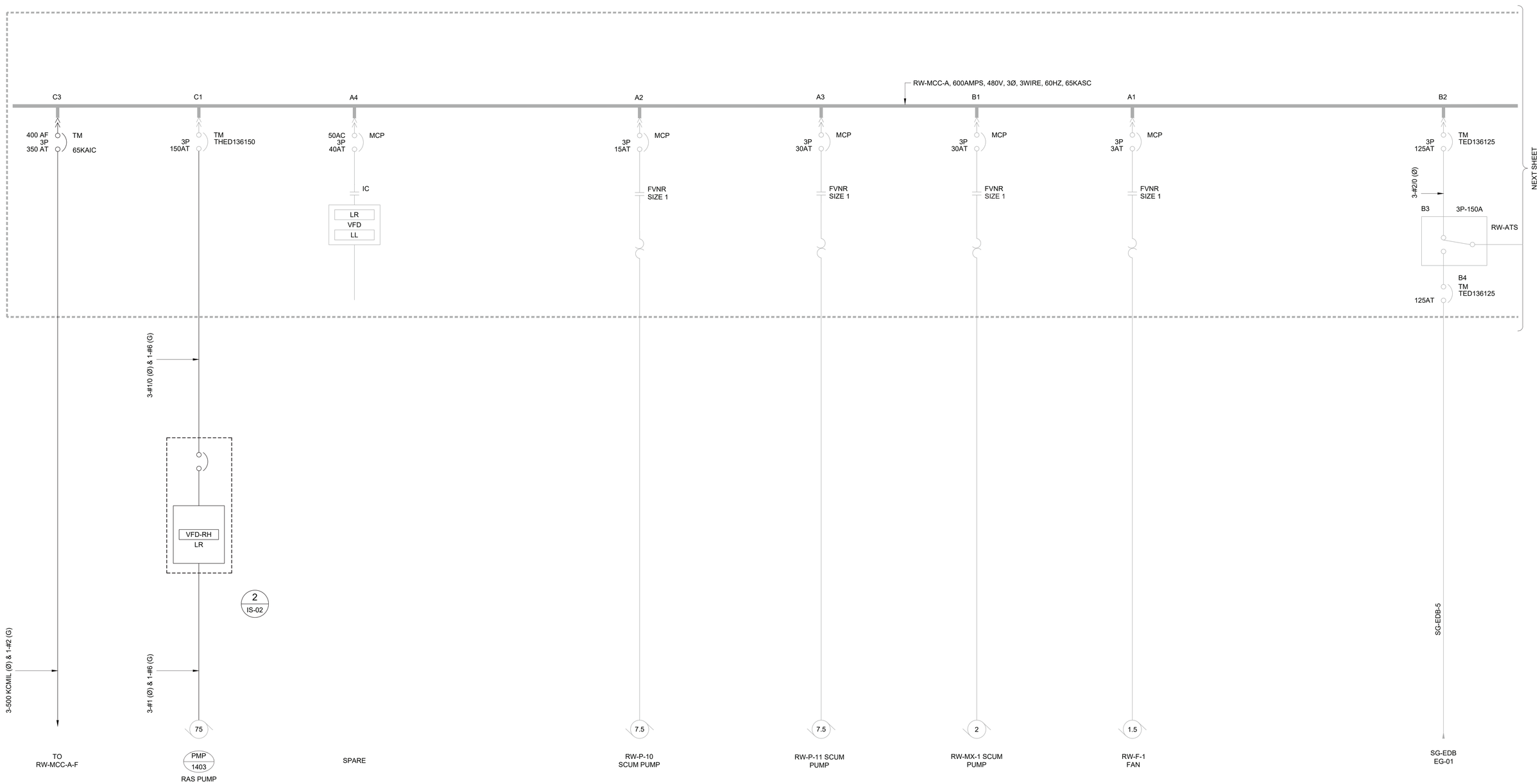

GENERAL NOTES:

1. THE VFDS SHOWN HERE ARE GENERIC AND DO NOT INDICATE A PREFERENCE FOR ONE MANUFACTURER.
2. VFD INSTALLATION, RACEWAY AND WIRING AND MCC MODIFICATIONS ARE PROVIDED BY OTHERS.

REV	DATE	BY	DESCRIPTION
1	9-28-22	CAC	ADDENDUM NO. 1

DESIGNED CAC
DRAWN BLS
CHECKED CLL
DATE SEPTEMBER 2022

Digitally signed by Christopher Alves Carvalho
Contact Info: Carvalho@carollo.com
Date: 2022.09.28 15:27:42 -06'00'

REGISTERED PROFESSIONAL ENGINEER
No. 366286
CHRISTOPHER A CARVALHO
STATE OF UTAH

carollo

South Valley
WATER RECLAMATION FACILITY
7495 South 1300 West
West Jordan, Utah 84084

SOUTH VALLEY WATER RECLAMATION
2022 VFD REPLACEMENT
ELECTRICAL
RW-MCC-A
REVISED ONE-LINE DIAGRAM - 1

VERIFY SCALES
BAR IS ONE INCH ON ORIGINAL DRAWING
0 1"
IF NOT ONE INCH ON THIS SHEET, ADJUST SCALES ACCORDINGLY

JOB NO. 201238
DRAWING NO. GE-OL-RW-02
SHEET NO.
OF 136

LAST SAVED BY: tmorabito

PROJECT NO. 201238-100000 FILE NAME: GE-OL-RW-02.dwg

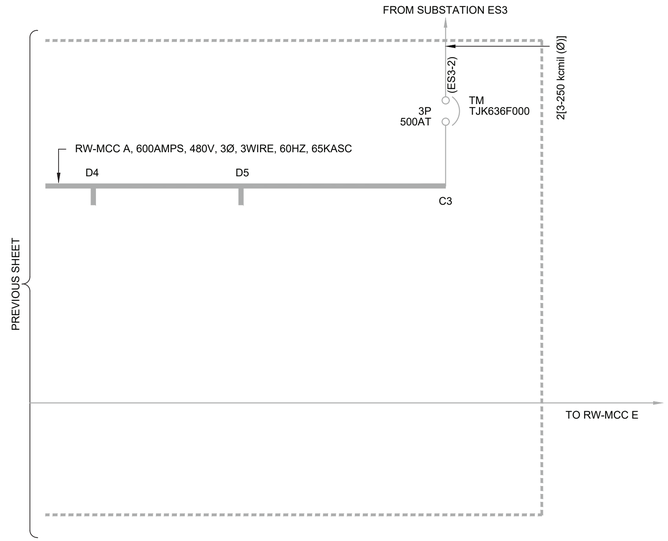

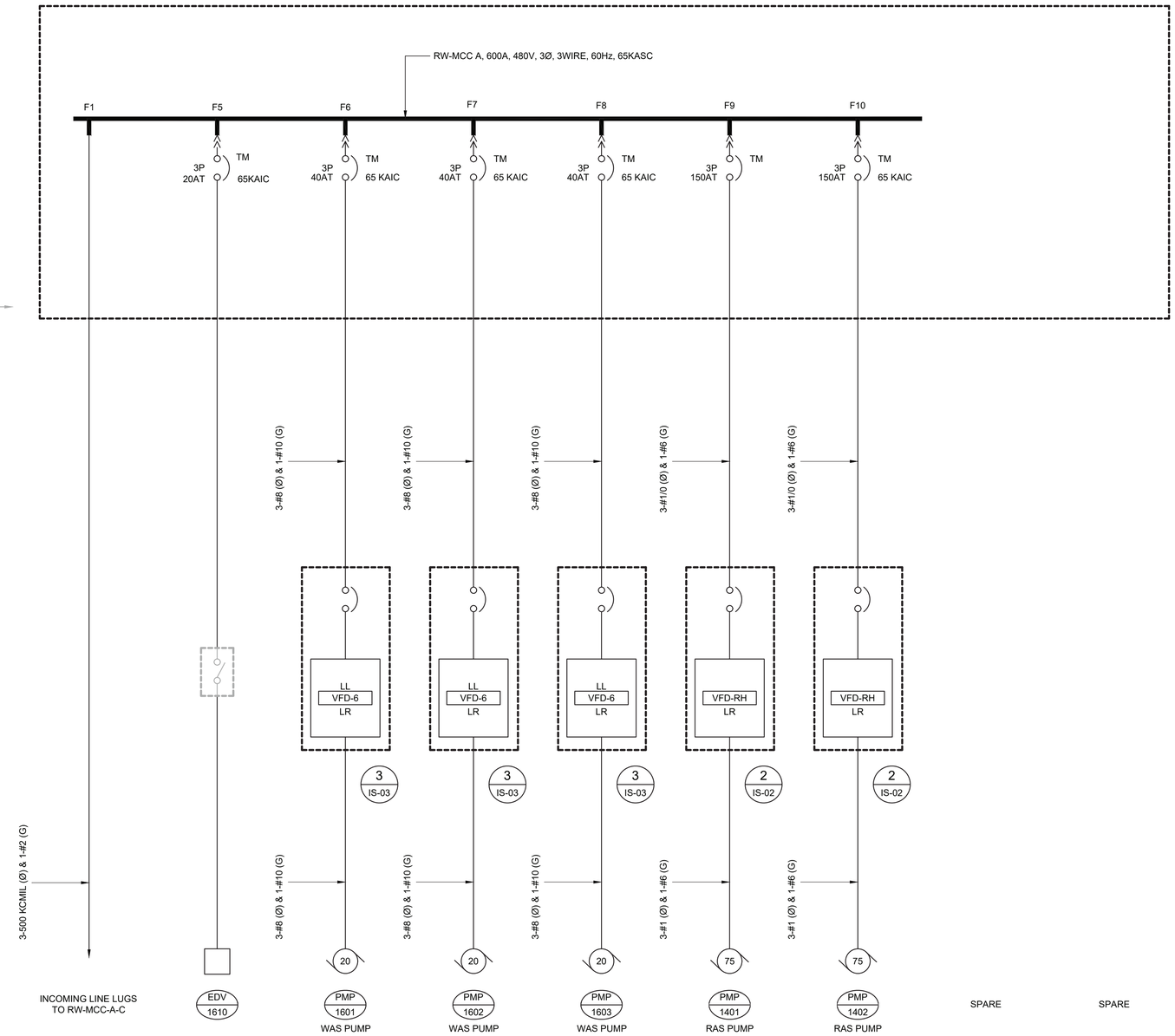

GENERAL NOTES:

1. THE VFDS SHOWN HERE ARE GENERIC AND DO NOT INDICATE A PREFERENCE FOR ONE MANUFACTURER.
2. VFD INSTALLATION, RACEWAY AND WIRING AND MCC MODIFICATIONS ARE PROVIDED BY OTHERS.

REV	DATE	BY	DESCRIPTION
1	9-28-22	CAC	ADDENDUM NO. 1

DESIGNED CAC
DRAWN BLS
CHECKED CLL
DATE SEPTEMBER 2022

Digitally signed by Christopher A Carvalho
Contact Info: carollo.com
Date: 2022.09.28 14:09:42 -06'00'
REGISTERED PROFESSIONAL ENGINEER No. 366266 CHRISTOPHER A CARVALHO STATE OF UTAH

carollo

South Valley WATER RECLAMATION FACILITY
7495 South 1300 West
West Jordan, Utah 84084

SOUTH VALLEY WATER RECLAMATION
2022 VFD REPLACEMENT
ELECTRICAL
RW-MCC-A
REVISED ONE-LINE DIAGRAM - 2

VERIFY SCALES
BAR IS ONE INCH ON ORIGINAL DRAWING
0 1"
IF NOT ONE INCH ON THIS SHEET, ADJUST SCALES ACCORDINGLY

JOB NO. 201238
DRAWING NO. GE-OL-RW-03
SHEET NO. OF 136

LAST SAVED BY: tmorabito

PROJECT NO. 201238-100000 FILE NAME: GE-OL-RW-03.dwg

GENERAL NOTES:

1. THE VFDS SHOWN HERE ARE GENERIC AND DO NOT INDICATE A PREFERENCE FOR ONE MANUFACTURER.
2. VFD INSTALLATION, RACEWAY AND WIRING AND MCC MODIFICATIONS ARE PROVIDED BY OTHERS.

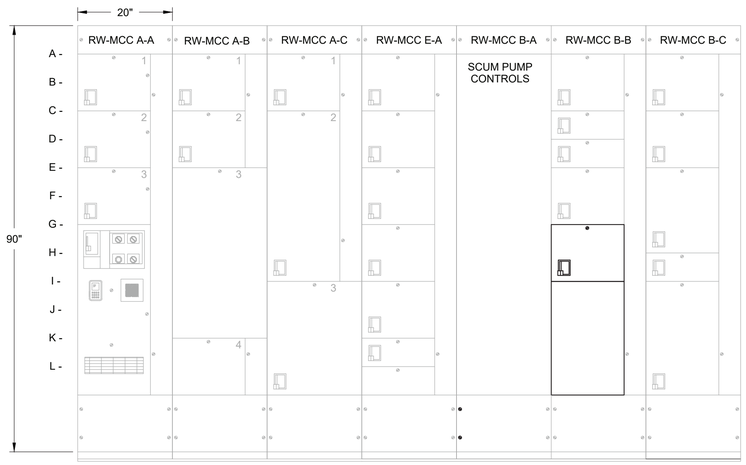

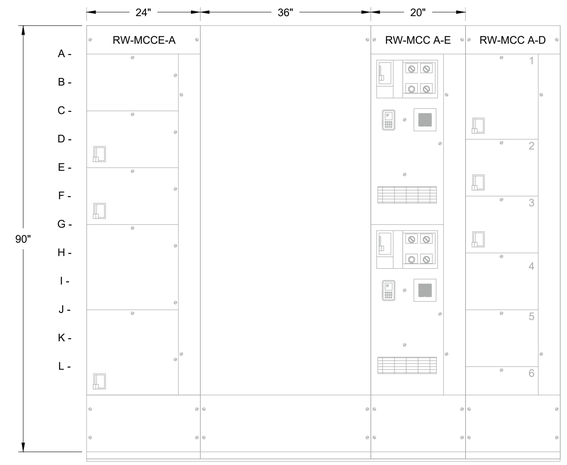

RW-MCC B ELEVATION

B1 - PMP-1406
RAS PUMP

B2 - RW-ME-1
FURNACE AND FAN

B3 - OVERHEAD DOOR

B4 - PMP-1404
RAS PUMP

B5 - PMP-1405
RAS PUMP

B6 - SPACE

C1 - RW-MX-2
SCUM MIXER

C2 - RW-ME-4
CONDENSER

C3 - RW-ME-5
CONDENSER

C4 - RW-F-2
A/C FAN

C5 - MAIN FROM ES-3

REV	DATE	BY	DESCRIPTION
1	9-28-22	CAC	ADDENDUM NO. 1

DESIGNED CAC
DRAWN BLS
CHECKED
DATE SEPTEMBER 2022

Digitally signed by Christopher A Carvalho
Contact Info: christopher@carvalho.pro
Date: 2022.09.28 09:37:00 -06'00'

REGISTERED PROFESSIONAL ENGINEER
No. 366286
CHRISTOPHER A CARVALHO
STATE OF UTAH

carollo

South Valley
WATER RECLAMATION FACILITY
7495 South 1300 West
West Jordan, Utah 84084

SOUTH VALLEY WATER RECLAMATION
2022 VFD REPLACEMENT
ELECTRICAL
RW-MCC-B
REVISED ELEVATION

VERIFY SCALES
BAR IS ONE INCH ON ORIGINAL DRAWING
0 1"
IF NOT ONE INCH ON THIS SHEET, ADJUST SCALES ACCORDINGLY

JOB NO. 201238
DRAWING NO. GE-OL-RW-04
SHEET NO. OF 136

LAST SAVED BY: tmorabito

PROJECT NO. 201238-100000 FILE NAME: GE-OL-RW-04.dwg

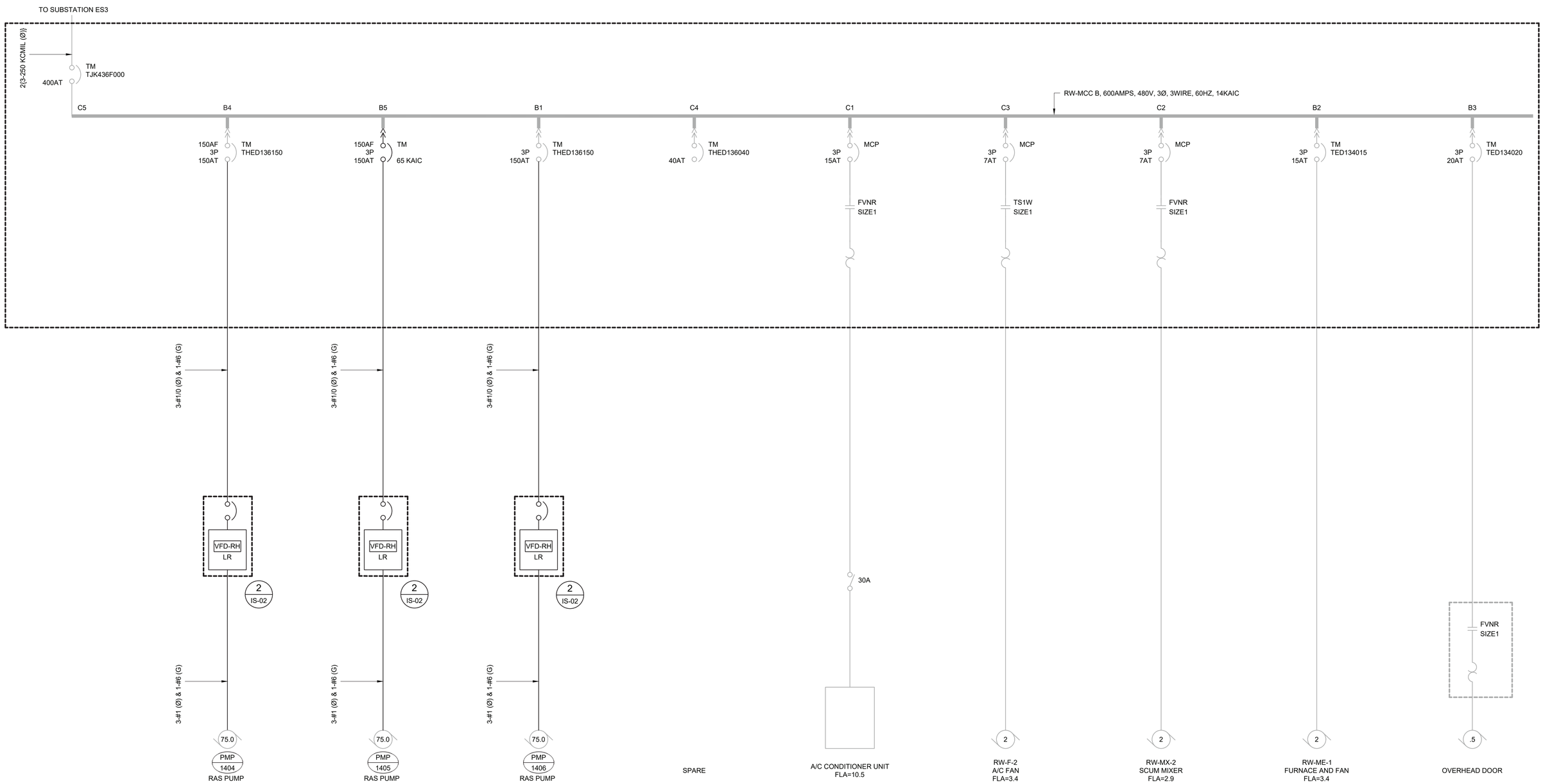

GENERAL NOTES:

1. THE VFDS SHOWN HERE ARE GENERIC AND DO NOT INDICATE A PREFERENCE FOR ONE MANUFACTURER.
2. VFD INSTALLATION, RACEWAY AND WIRING AND MCC MODIFICATIONS ARE PROVIDED BY OTHERS.

REV	DATE	BY	DESCRIPTION
1	9-28-22	CAC	ADDENDUM NO. 1

DESIGNED CAC
DRAWN BLS
CHECKED
DATE SEPTEMBER 2022

Digitally signed by Christopher A Carvalho
Contact Info: carvalhoca@carollo.com
Date: 2022.09.28 14:37:00 -06'00'
REGISTERED PROFESSIONAL ENGINEER No. 366286 CHRISTOPHER A CARVALHO STATE OF UTAH

carollo

South Valley
WATER RECLAMATION FACILITY
7495 South 1300 West
West Jordan, Utah 84084

SOUTH VALLEY WATER RECLAMATION
2022 VFD REPLACEMENT
ELECTRICAL
RW-MCC-B
REVISED ONE-LINE DIAGRAM

VERIFY SCALES
BAR IS ONE INCH ON ORIGINAL DRAWING
0 1"
IF NOT ONE INCH ON THIS SHEET, ADJUST SCALES ACCORDINGLY

JOB NO. 201238
DRAWING NO. GE-OL-RW-05
SHEET NO. OF 136

LAST SAVED BY: tmorabito

PROJECT NO. 201238-100000 FILE NAME: GE-OL-RW-05.dwg

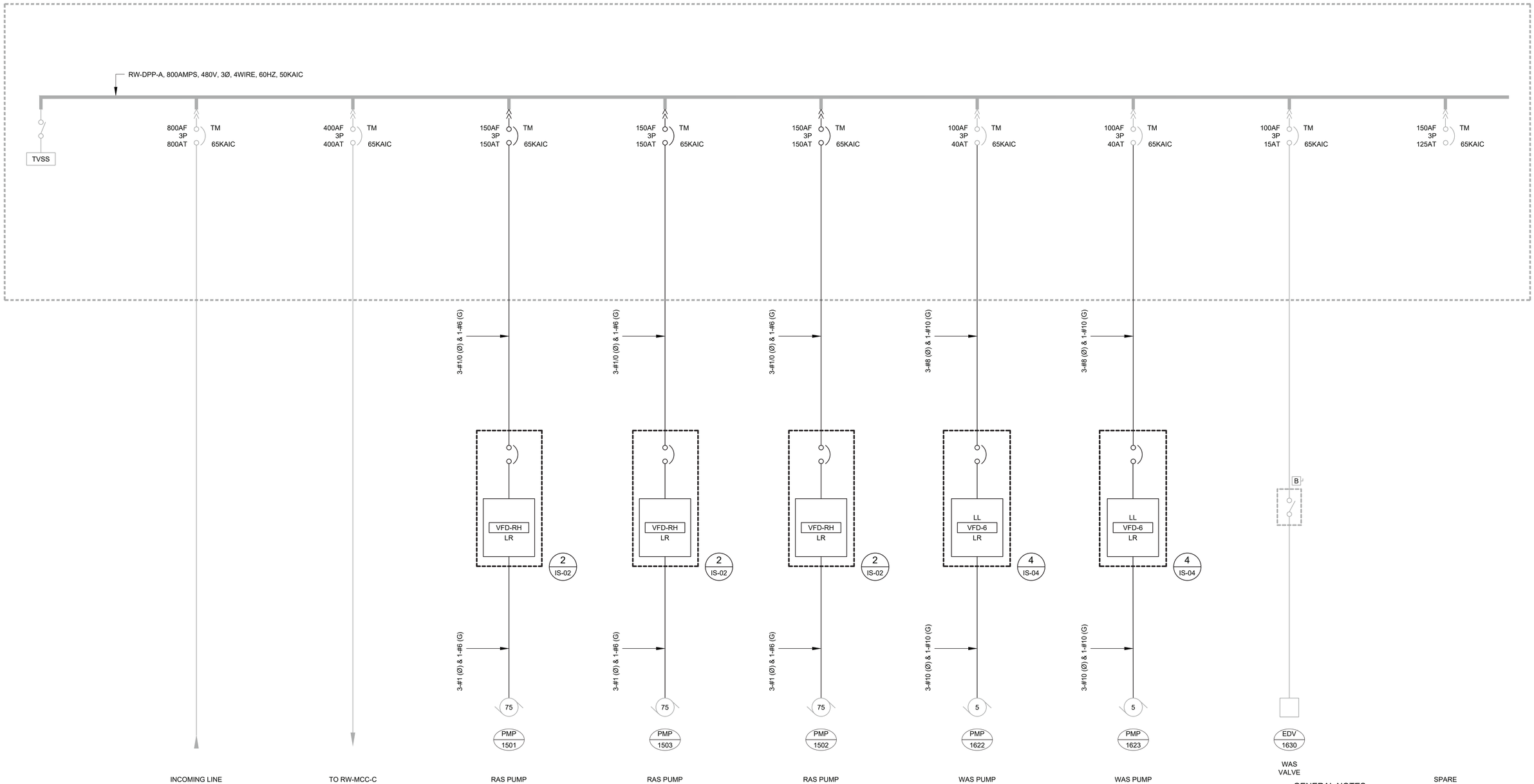

GENERAL NOTES:

1. THE VFDS SHOWN HERE ARE GENERIC AND DO NOT INDICATE A PREFERENCE FOR ONE MANUFACTURER.
2. VFD INSTALLATION, RACEWAY AND WIRING AND MCC MODIFICATIONS ARE PROVIDED BY OTHERS.

REV	DATE	BY	DESCRIPTION
1	9-28-22	CAC	ADDENDUM NO. 1

DESIGNED CAC
DRAWN BLS
CHECKED
DATE SEPTEMBER 2022

Digitally signed by Christopher A Carvalho
Contact Info: christopher@carollo.com
Date: 2022.09.28 14:15:47 -06'00'
REGISTERED PROFESSIONAL ENGINEER No. 366286 CHRISTOPHER A CARVALHO STATE OF UTAH

carollo

South Valley WATER RECLAMATION FACILITY
7495 South 1300 West
West Jordan, Utah 84084

SOUTH VALLEY WATER RECLAMATION
2022 VFD REPLACEMENT
ELECTRICAL
RW-DPP-A
REVISED ONE-LINE DIAGRAM

VERIFY SCALES
BAR IS ONE INCH ON ORIGINAL DRAWING
0 1"
IF NOT ONE INCH ON THIS SHEET, ADJUST SCALES ACCORDINGLY

JOB NO. 201238
DRAWING NO. GE-OL-RW-06
SHEET NO. OF 136

LAST SAVED BY: tmorabito

PROJECT NO. 201238-100000 FILE NAME: GE-OL-RW-06.dwg

GENERAL NOTES

1. THE VFDS SHOWN HERE ARE GENERIC AND DO NOT INDICATE A PREFERENCE FOR ONE MANUFACTURER.
2. THE CONTROL SECTIONS ARE PROVIDED BY OTHERS. REFER TO THE SPECIFICATIONS FOR AND SCHEMATICS FOR VFD WIRING REQUIREMENTS.
3. ALL VFDS ARE FED FROM THE TOP AND ALL MOTOR LEADS EXIT THE TOP WITH THE EXCEPTION OF HW-VFD-4 WHICH IS BOTTOM FED.
4. VFD INSTALLATION, ALL RACEWAY AND WIRING IS PROVIDED BY OTHERS.
5. STANDBY POWER FROM DIESEL GENERATORS IS AVAILABLE TO ALL INFLUENT PUMP VFDS.

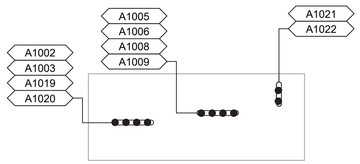

JUNCTION BOX FLOOR PLAN

SCALE: 1/2" = 1' - 0"
FILE: 01-089-901.dwg

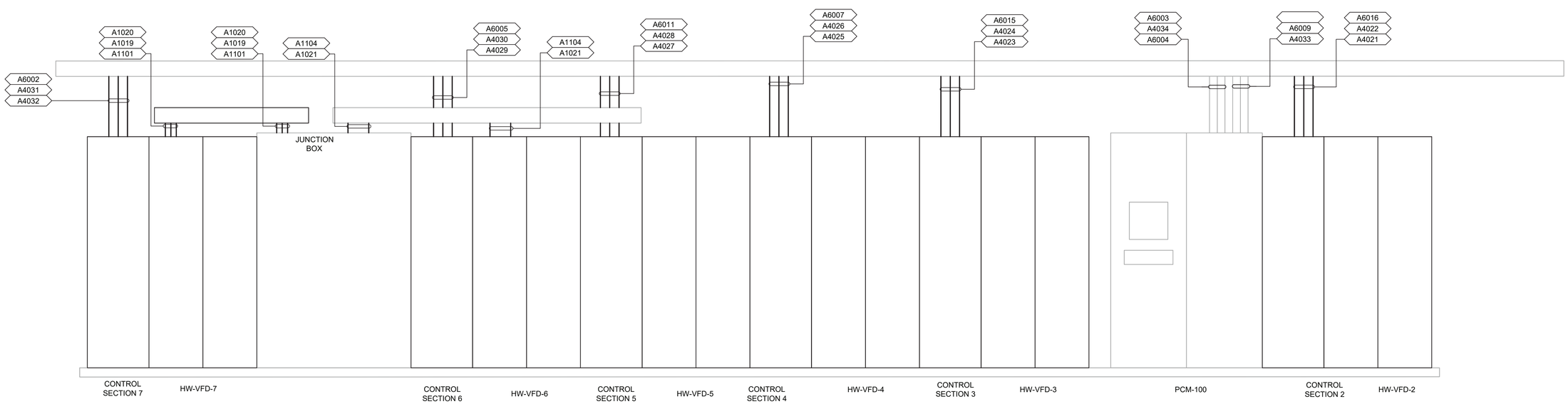

REVISED VFD LINEUP ELEVATION

SCALE: 1/2" = 1'-0"
FILE: 01-089-901.dwg

REV	DATE	BY	DESCRIPTION
1	9-28-22	CAC	ADDENDUM NO. 1

DESIGNED CAC
DRAWN TLM
CHECKED CLL
DATE SEPTEMBER 2022

REGISTERED PROFESSIONAL ENGINEER No. 366286 CHRISTOPHER A CARVALHO STATE OF UTAH

carollo

South Valley WATER RECLAMATION FACILITY
7495 South 1300 West
West Jordan, Utah 84084

SOUTH VALLEY WATER RECLAMATION
2022 VFD REPLACEMENT
ELECTRICAL
HEADWORKS PUMP STATION
REVISED VFD LINEUP

VERIFY SCALES
BAR IS ONE INCH ON ORIGINAL DRAWING
0 1"
IF NOT ONE INCH ON THIS SHEET, ADJUST SCALES ACCORDINGLY

JOB NO. 201238
DRAWING NO. 1E-01
SHEET NO. OF 136

LAST SAVED BY: avates

PROJECT NO. 201238-100000 FILE NAME: 1E-01.dwg

GENERAL NOTES

1. THE VFDS SHOWN HERE ARE GENERIC AND DO NOT INDICATE A PREFERENCE FOR ONE MANUFACTURER.
2. ALL VFDS WILL HAVE TOP AND BOTTOM CONDUIT ENTRIES.
3. VFD INSTALLATION, ALL RACEWAY AND WIRING IS PROVIDED BY OTHERS.
4. STANDBY POWER IS NOT AVAILABLE TO THESE VFDS.

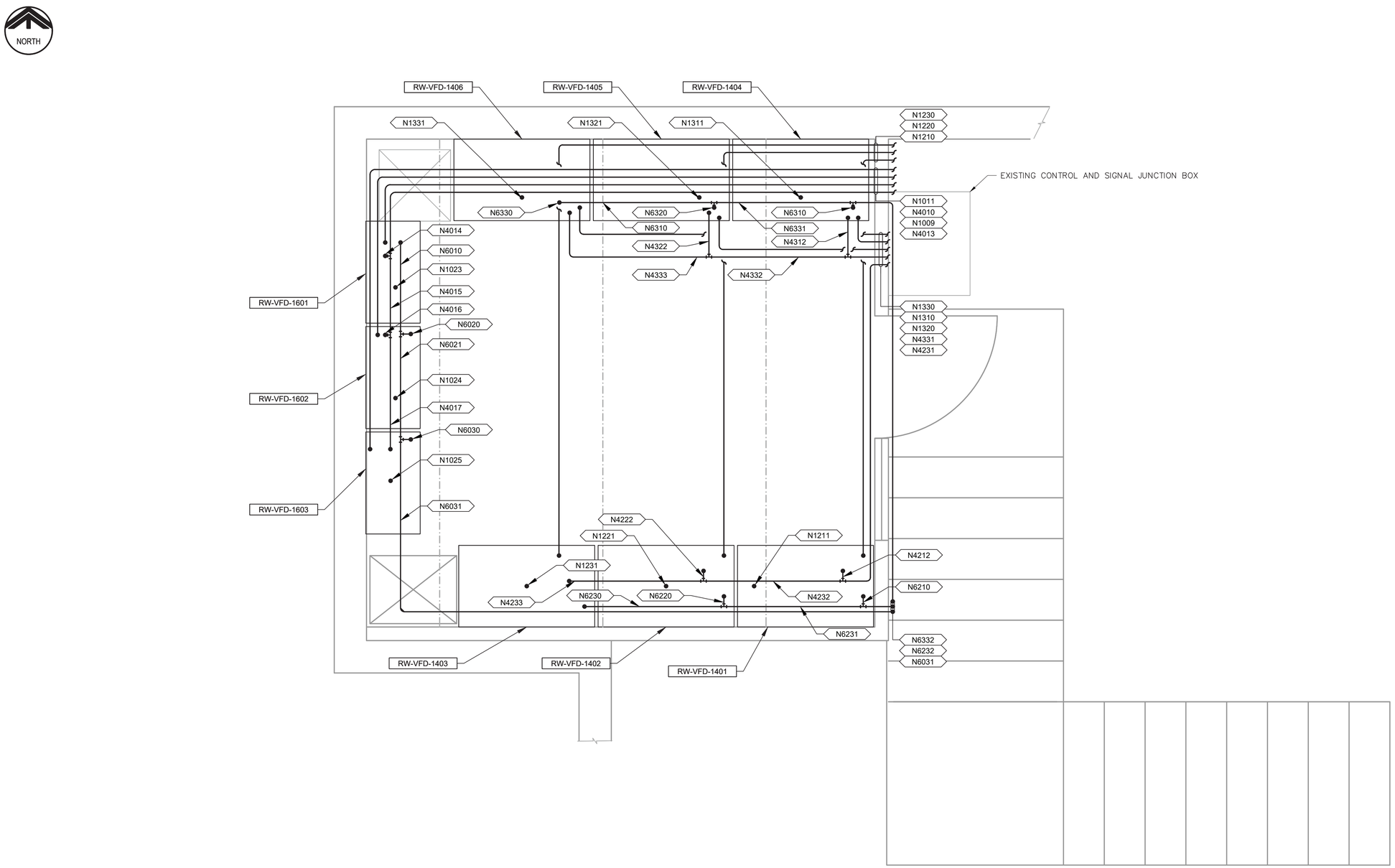

RAS/WAS BUILDING NO. 1 UPPER LEVEL ELECTRICAL ROOM MODIFICATION PLAN

SCALE: 3/4" = 1'-0"
FILE: 07-080-201

REV	DATE	BY	DESCRIPTION
1	9-28-22	CAC	ADDENDUM NO. 1

DESIGNED CAC
DRAWN TLM
CHECKED CLL
DATE SEPTEMBER 2022

Digitally signed by Christopher A Carvalho
Contact Info: ccarvalho@carollo.com
Date: 2022.09.28 14:12:42 -06'00'

REGISTERED PROFESSIONAL ENGINEER No. 366266 CHRISTOPHER A CARVALHO STATE OF UTAH

carollo

South Valley WATER RECLAMATION FACILITY
7495 South 1300 West
West Jordan, Utah 84084

SOUTH VALLEY WATER RECLAMATION
2022 VFD REPLACEMENT
ELECTRICAL
RAS/WAS BUILDING #1
UPPER LEVEL REVISED PLAN

VERIFY SCALES
BAR IS ONE INCH ON ORIGINAL DRAWING
0 1"
IF NOT ONE INCH ON THIS SHEET, ADJUST SCALES ACCORDINGLY

JOB NO. 201238
DRAWING NO. 14E-02
SHEET NO. OF 136

LAST SAVED BY: avates

PROJECT NO. 201238-100000 FILE NAME: 14E-02.dwg

GENERAL NOTES

1. THE VFDS SHOWN HERE ARE GENERIC AND DO NOT INDICATE A PREFERENCE FOR ONE MANUFACTURER.
2. ALL VFDS WILL HAVE TOP AND BOTTOM CONDUIT ENTRIES.
3. VFD INSTALLATION, ALL RACEWAY AND WIRING IS PROVIDED BY OTHERS.
4. STANDBY POWER IS NOT AVAILABLE TO THESE VFDS.

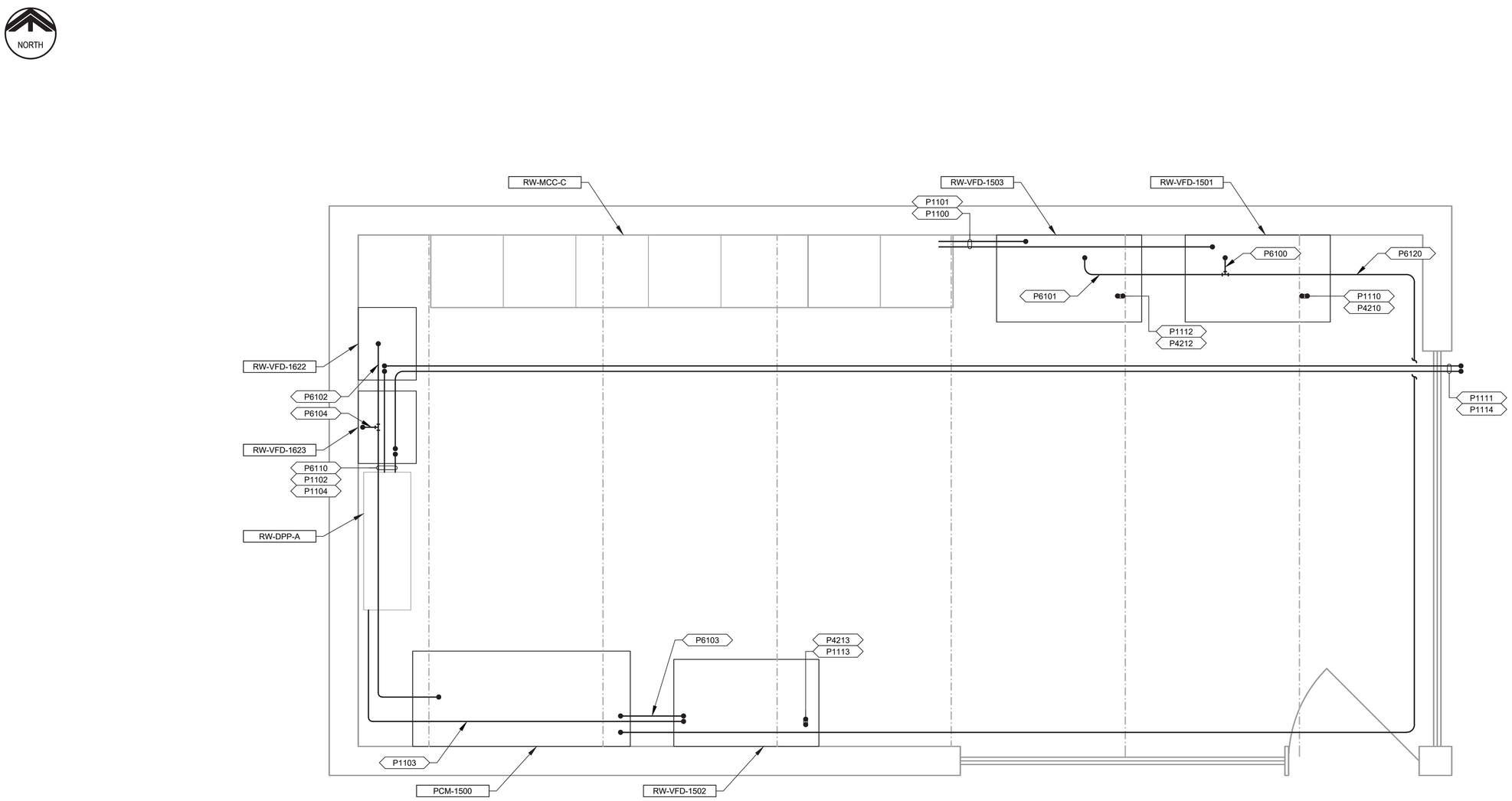

RAS/WAS BUILDING NO. 2 UPPER LEVEL ELECTRICAL ROOM PLAN

SCALE: 3/4" = 1'-0"
FILE: 07-080-201

REV	DATE	BY	DESCRIPTION
1	9-28-22	CAC	ADDENDUM NO. 1

DESIGNED CAC
DRAWN TLM
CHECKED CLL
DATE SEPTEMBER 2022

Digitally signed by Christopher A Carvalho
Contact Info: carvalho@carollo.com
Date: 2022.09.28 14:08:42 -06'00'
REGISTERED PROFESSIONAL ENGINEER No. 366286 CHRISTOPHER A CARVALHO STATE OF UTAH

carollo

South Valley WATER RECLAMATION FACILITY
7495 South 1300 West
West Jordan, Utah 84084

SOUTH VALLEY WATER RECLAMATION
2022 VFD REPLACEMENT
ELECTRICAL
RAS/WAS BUILDING #2 UPPER LEVEL
REVISED PLAN

VERIFY SCALES
BAR IS ONE INCH ON ORIGINAL DRAWING
0 1"
IF NOT ONE INCH ON THIS SHEET, ADJUST SCALES ACCORDINGLY

JOB NO. 201238
DRAWING NO. 17E-02
SHEET NO. OF 136

LAST SAVED BY: avates

PROJECT NO. 201238-100000 FILE NAME: 17E-02.dwg

PROCESS SWITCHES

- FLOAT SWITCH
  CLOSE ON RISING LEVEL
- FLOAT SWITCH
  OPEN ON RISING LEVEL
- PRESSURE SWITCH
  CLOSE ON RISING PRESSURE
- PRESSURE SWITCH
  OPEN ON RISING PRESSURE
- TEMPERATURE SWITCH
  CLOSE ON RISING TEMPERATURE
- TEMPERATURE SWITCH
  OPEN ON RISING TEMPERATURE
- FLOW SWITCH
  CLOSE ON INCREASE IN FLOW
- FLOW SWITCH
  OPEN ON INCREASE IN FLOW
- VIBRATION SWITCH
  OPEN ON RISING VIBRATION
- VIBRATION SWITCH
  CLOSE ON RISING VIBRATION
- TORQUE SWITCH
  OPEN ON HIGH TORQUE
- TORQUE SWITCH
  CLOSE ON HIGH TORQUE
- NORMALLY CLOSED
  LIMIT SWITCH
- NORMALLY CLOSED
  HELD OPEN LIMIT SWITCH
- NORMALLY OPEN
  LIMIT SWITCH
- NORMALLY OPEN
  HELD CLOSED LIMIT SWITCH

HAND SWITCHES

- NORMALLY OPEN
  MOMENTARY PUSHBUTTON
- NORMALLY CLOSED
  MOMENTARY PUSHBUTTON
- xoo — THREE POSITION SELECTOR SWITCH
  x - DENOTES POSITION CONTACTS
  CLOSED IN
- xo — TWO POSITION SELECTOR SWITCH
  x - DENOTES POSITION CONTACTS
  CLOSED IN
- MUSHROOM HEAD PUSHBUTTON
- PUSH-PULL PUSHBUTTON
  MAINTAINED CONTACT
- xox — PADLOCK SWITCH
  x - DENOTES POSITION CONTACTS
  CLOSED IN
- PULL CORD SWITCH
- STOP-LOCKOUT PUSHBUTTON
- xoo — SPRING-RETURN
  x - DENOTES POSITION CONTACTS
  CLOSED IN

INDICATORS

- a — PILOT LIGHT
  a = LENS COLOR
  R = RED
  G = GREEN
  W = WHITE
  A = AMBER
  B = BLUE
  Y = YELLOW
  C = CLEAR
- a — BEACON
  a = LENS COLOR
  R = RED
  G = GREEN
  W = WHITE
  A = AMBER
  B = BLUE
  M = MAGENTA
  C = CLEAR
- H — HORN

RELAYS

- d / a / b / c — RELAY COIL
  a = TYPE
  CR- CONTROL RELAY
  TD- TIME DELAY RELAY
  M - MOTOR STARTER COIL
  L - MOTOR STARTER COIL - LOW SPEED
  H - MOTOR STARTER COIL - HIGH SPEED
  F - MOTOR STARTER COIL - FORWARD
  R - MOTOR STARTER COIL - REVERSE

  b = TDON - TIME DELAY ON ENERGIZATION
  TDOFF - TIME DELAY ON DEENERGIZATION

  c = TIMING RANGE/SETTING
  d = DESCRIPTION
- NORMALLY OPEN
  CONTROL CONTACT
- NORMALLY CLOSED
  CONTROL CONTACT
- NOTC — TIME DELAY CONTACT
  NORMALLY OPEN
  TIMED CLOSING
- NCTO — TIME DELAY CONTACT
  NORMALLY CLOSED
  TIMED OPENING
- NOTO — TIME DELAY CONTACT
  NORMALLY OPEN
  TIMED OPENING
- NCTC — TIME DELAY CONTACT
  NORMALLY CLOSED
  TIMED CLOSING

TERMINAL BLOCKS

- TERMINAL
  IN PLC/PCM PANEL
- TERMINAL
  IN MOTOR CONTROL CENTER
- TERMINAL
  IN LOCAL STARTER CONTROL PANEL
- TERMINAL
  AT FIELD DEVICE
- TERMINAL
  IN RTU
- TERMINAL
  IN FIELD PANEL
- TERMINAL
  IN (USER CHOICE)
- * — DIGITAL BUS CONNECTOR
  * = D - DEVICENET
  * = PA - PROFIBUS PA
  * = DP - PROFIBUS DP
  * = H1 - FOUNDATION FIELDBUS H1
  * = H2 - FOUNDATION FIELDBUS H2
  * = E - ETHERNET

I/O

- a — PLC DISCRETE
  a = INPUT OR OUTPUT AS INDICATED
- ANALOG a — PLC ANALOG
  a = INPUT OR OUTPUT AS INDICATED
- DIGITAL BUS — DIGITAL BUS

MISC

- SOLENOID
- M — METER UNIT
  M = TYPE
- HP — MOTOR
- CIRCUIT BREAKER
- DISCONNECT
- FUSE
- TRANSIENT SURGE
  PROTECTION
- MWH-* — MOTOR WINDING HEATER
  * - MOTOR TAG I.D.
- SPACE HEATER
- VARISTOR
- CAPACITOR
- RESISTOR
- BATTERY
- DIODE
- MOTOR OVERLOAD
  HEATERS
- OVERLOAD CONTACT
- DRAWOUT CONNECTION
- GROUND
- LIGHTNING ARRESTOR
- H1 H3 H2 H4 / X1 X2 — CONTROL POWER
  TRANSFORMER
- KI-* / ETM — ELAPSED TIME METER

REV	DATE	BY	DESCRIPTION
1	9-28-22	CAC	ADDENDUM NO. 1

DESIGNED CE
DRAWN CE
CHECKED CE
DATE SEPTEMBER 2022

Digitally signed by Matthew Hatch
Contact Info: matt@carollo.com
Date: 2022.09.28 10:30:42 -06'00'
REGISTERED PROFESSIONAL ENGINEER No. 5612657 MATTHEW G. HATCH STATE OF UTAH

carollo

South Valley
WATER RECLAMATION FACILITY
7495 South 1300 West
West Jordan, Utah 84084

SOUTH VALLEY WATER RECLAMATION
2022 VFD REPLACEMENT
INSTRUMENTATION
SCHEMATIC SYMBOLS

VERIFY SCALES
BAR IS ONE INCH ON ORIGINAL DRAWING
0 1"
IF NOT ONE INCH ON THIS SHEET, ADJUST SCALES ACCORDINGLY

JOB NO. 201238
DRAWING NO. GN05
SHEET NO.
OF

Plot Date: 9/28/2022 10:30:42 AM
FILE NAME: 201238GN05.dwg
PROJECT NO. 201238-100000
LAST SAVED BY: bshepard

VFD_1						
VFD						
PROTOCOL: PROFINET						
DESCRIPTION	CONTROL	HISTORIZE	INDICATE	ALARM	TREND	INTERLOCK
HAND			✓			
OFF	✓		✓			
AUTO			✓			
STOP	✓		✓			
START	✓		✓			
SPEED	✓		✓			
SPEED FEEDBACK		✓	✓		✓	
RESET ELAPSED TIME	✓		✓			
RUNNING		✓	✓		✓	
TOTAL STARTS		✓	✓			
DAILY STARTS		✓	✓			
ELAPSED TIME		✓	✓			
DAILY RUN TIME		✓	✓			
A PH V		✓	✓		✓	
B PH V		✓	✓		✓	
C PH V		✓	✓		✓	
A PH CURRENT		✓	✓		✓	
B PH CURRENT		✓	✓		✓	
C PH CURRENT		✓	✓		✓	
AVERAGE 3 PH CURRENT		✓	✓		✓	
POWER KVA		✓	✓		✓	
POWER KW		✓	✓		✓	
POWER FACTOR		✓	✓		✓	
CURRENT ALARM HIGH			✓	✓		✓
OVERLOAD			✓	✓		✓
FAULT		✓	✓	✓		✓
SMART OVERLOAD FAILED			✓	✓		✓
FAIL TO RESPOND			✓	✓		✓
SAFETY STOP STATUS			✓	✓		✓

VFD_2						
VFD						
PROTOCOL: PROFINET						
DESCRIPTION	CONTROL	HISTORIZE	INDICATE	ALARM	TREND	INTERLOCK
HAND			✓			
OFF	✓		✓			
AUTO			✓			
STOP	✓		✓			
START	✓		✓			
SPEED	✓		✓			
SPEED FEEDBACK		✓	✓		✓	
RESET ELAPSED TIME	✓		✓			
RUNNING		✓	✓		✓	
TOTAL STARTS		✓	✓			
DAILY STARTS		✓	✓			
ELAPSED TIME		✓	✓			
DAILY RUN TIME		✓	✓			
A PH V		✓	✓		✓	
B PH V		✓	✓		✓	
C PH V		✓	✓		✓	
A PH CURRENT		✓	✓		✓	
B PH CURRENT		✓	✓		✓	
C PH CURRENT		✓	✓		✓	
AVERAGE 3 PH CURRENT		✓	✓		✓	
POWER KVA		✓	✓		✓	
POWER KW		✓	✓		✓	
POWER FACTOR		✓	✓		✓	
CURRENT ALARM HIGH			✓	✓		✓
OVERLOAD			✓	✓		✓
FAULT		✓	✓	✓		✓
SMART OVERLOAD FAILED			✓	✓		✓
FAIL TO RESPOND			✓	✓		✓
SAFETY STOP STATUS			✓	✓		✓

VFD_3						
VFD						
PROTOCOL: PROFINET						
DESCRIPTION	CONTROL	HISTORIZE	INDICATE	ALARM	TREND	INTERLOCK
HAND			✓			
OFF	✓		✓			
AUTO			✓			
STOP	✓		✓			
START	✓		✓			
SPEED	✓		✓			
SPEED FEEDBACK		✓	✓		✓	
RESET ELAPSED TIME	✓		✓			
RUNNING		✓	✓		✓	
TOTAL STARTS		✓	✓			
DAILY STARTS		✓	✓			
ELAPSED TIME		✓	✓			
DAILY RUN TIME		✓	✓			
A PH V		✓	✓		✓	
B PH V		✓	✓		✓	
C PH V		✓	✓		✓	
A PH CURRENT		✓	✓		✓	
B PH CURRENT		✓	✓		✓	
C PH CURRENT		✓	✓		✓	
AVERAGE 3 PH CURRENT		✓	✓		✓	
POWER KVA		✓	✓		✓	
POWER KW		✓	✓		✓	
POWER FACTOR		✓	✓		✓	
CURRENT ALARM HIGH			✓	✓		✓
OVERLOAD			✓	✓		✓
FAULT		✓	✓	✓		✓
SMART OVERLOAD FAILED			✓	✓		✓
FAIL TO RESPOND			✓	✓		✓
SAFETY STOP STATUS			✓	✓		✓

REV	DATE	BY	DESCRIPTION

DESIGNED MGH
DRAWN AAW
CHECKED CLL
DATE SEPTEMBER 2022

Digitally signed by Matthew G. Hatch
Distinguished Name: cn=Matthew G. Hatch, c=US, o=Carollo, ou=Professional Engineer, email=mhatch@carollo.com, ou=Utah
Date: 2022.09.20 09:07:09 -07'00'

REGISTERED PROFESSIONAL ENGINEER
No. 5612657
MATTHEW G. HATCH
STATE OF UTAH

carollo

South Valley
WATER RECLAMATION FACILITY
7495 South 1300 West
West Jordan, Utah 84084

SOUTH VALLEY WATER RECLAMATION
2022 VFD REPLACEMENT
INSTRUMENTATION
I/O TABLES

VERIFY SCALES
BAR IS ONE INCH ON ORIGINAL DRAWING
0 1"
IF NOT ONE INCH ON THIS SHEET, ADJUST SCALES ACCORDINGLY

JOB NO. 201238
DRAWING NO. PI-0001
SHEET NO.
OF

PROJECT NO. 201238-100000 FILE NAME: 201238PI0001.dgn

Plot Date: 20-SEP-2022 9:07:09 AM
User: svcPW
PlotScale: 1:1
DesignScript: Carollo_Std_Pen_v0905.pen
ColorTable: gshade.ctb
Model: Layout1
LAST SAVED BY: bshepard

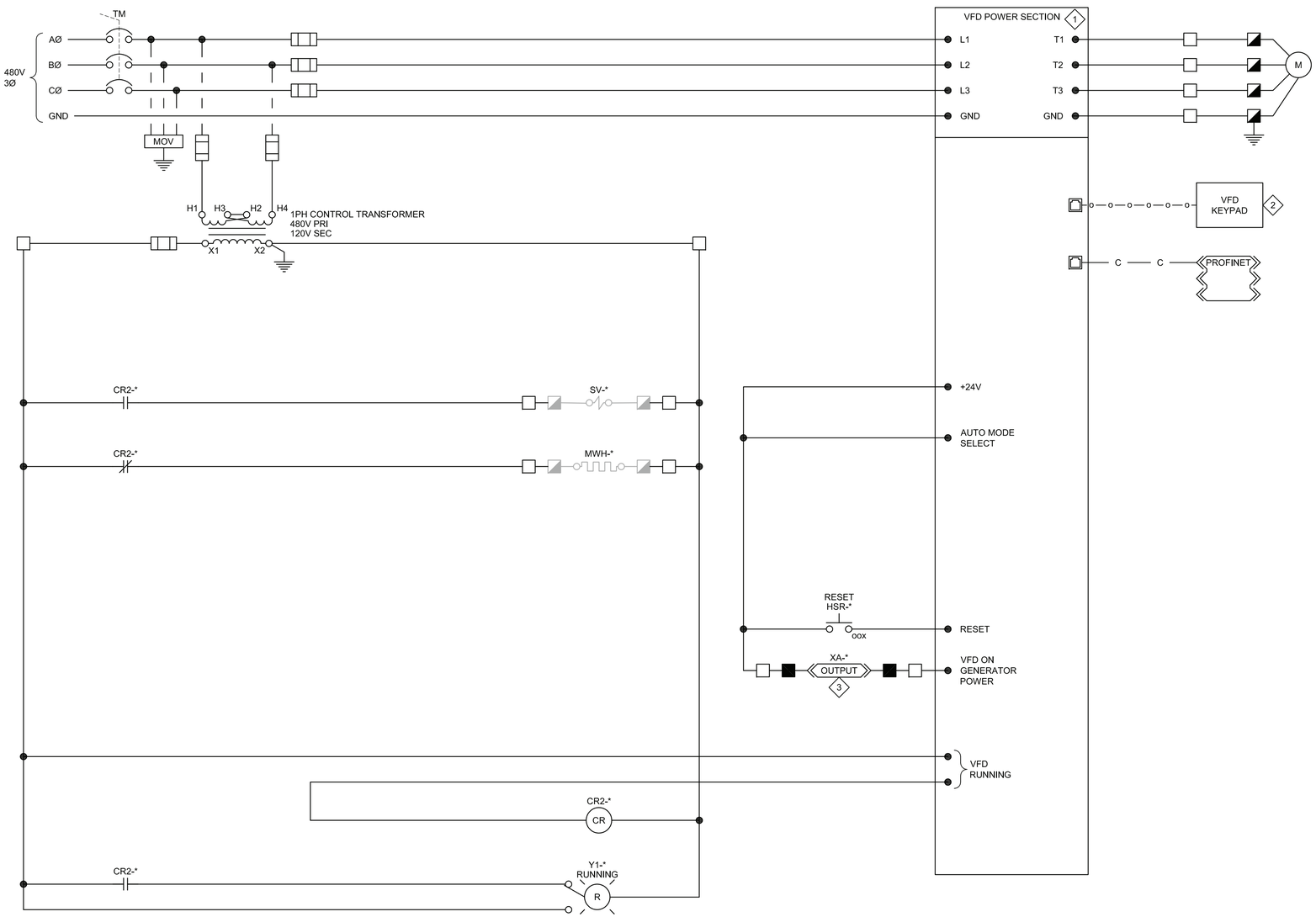

GENERAL NOTES:

1. THE SCHEMATIC SHOWS FUNCTIONALITY. REVISE THE SCHEMATIC AS REQUIRED TO PERFORM THE OPERATIONS INDICATED HERE AND DESCRIBED IN THE SPECIFICATIONS BASED ON THE MANUFACTURER'S EQUIPMENT.
2. REFER TO THE SPECIFICATIONS FOR CONTROL STRATEGIES AND VFD PROGRAMMING REQUIREMENTS.
3. THE VFD IS ALWAYS CONTROLLED BY THE LOCAL PLC IN THE CONTROL SECTION.

KEY NOTES:

1. REFER TO THE ONE-LINE DIAGRAMS AND THE SPECIFICATIONS FOR VFD TOPOLOGY, INPUT AND OUTPUT DEVICES.
2. MOUNT THE KEYPAD ON THE VFD ENCLOSURE DOOR.
3. PROGRAM A SECOND SET OF PARAMETERS INTO THE VFD THAT IS ACTIVATED WHEN THE VFD IS ON GENERATOR POWER.

TAG	LOOP	REFERENCE DWG.
* = HW-P2	P2-HW-P2	PI-HW-2
* = HW-P3	P3-HW-P3	PI-HW-3
* = HW-P4	P3-HW-P4	PI-HW-4
* = HW-P5	P3-HW-P5	PI-HW-5
* = HW-P6	P3-HW-P6	PI-HW-6
* = HW-P7	P3-HW-P7	PI-HW-7

1 CONTROL SCHEMATIC HEADWORKS PUMPS

REV	DATE	BY	DESCRIPTION
1	9-22-28	MGH	ADDENDUM NO. 1

DESIGNED NS
DRAWN TCD
CHECKED CLL
DATE SEPTEMBER 2022

REGISTERED PROFESSIONAL ENGINEER No. 5612657 MATTHEW G. HATCH STATE OF UTAH

carollo

South Valley WATER RECLAMATION FACILITY
7495 South 1300 West
West Jordan, Utah 84084

SOUTH VALLEY WATER RECLAMATION
2022 VFD REPLACEMENT
INSTRUMENTATION
HEADWORKS PUMPS CONTROL SCHEMATIC

VERIFY SCALES
BAR IS ONE INCH ON ORIGINAL DRAWING
0 1"
IF NOT ONE INCH ON THIS SHEET, ADJUST SCALES ACCORDINGLY

JOB NO. 201238
DRAWING NO. IS-01
SHEET NO.
OF

LAST SAVED BY: bshepard

PROJECT NO. 201238-100000 FILE NAME: 201238IS0001.dwg

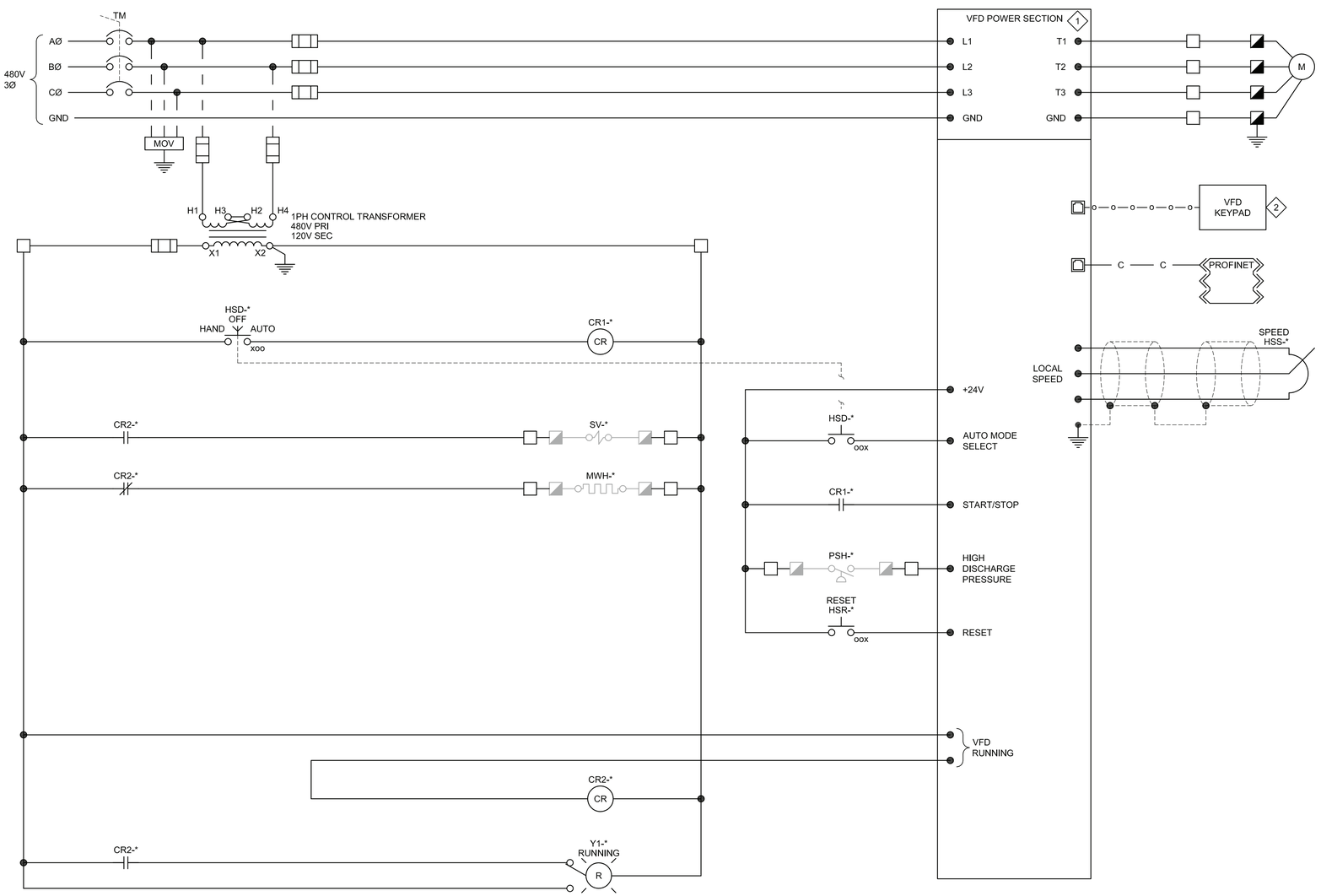

GENERAL NOTES:

1. THE SCHEMATIC SHOWS FUNCTIONALITY. REVISE THE SCHEMATIC AS REQUIRED TO PERFORM THE OPERATIONS INDICATED HERE AND DESCRIBED IN THE SPECIFICATIONS BASED ON THE MANUFACTURER'S EQUIPMENT.
2. REFER TO THE SPECIFICATIONS FOR CONTROL STRATEGIES AND VFD PROGRAMMING REQUIREMENTS.

KEY NOTES:

1. REFER TO THE ONE-LINE DIAGRAMS AND THE SPECIFICATIONS FOR VFD TOPOLOGY, INPUT AND OUTPUT DEVICES.
2. MOUNT THE KEYPAD ON THE VFD ENCLOSURE DOOR.

TAG	LOOP	REFERENCE DWG.
* = 1401	PMP-1401	PI-1401
* = 1402	PMP-1402	PI-1402
* = 1403	PMP-1403	PI-1403
* = 1404	PMP-1404	PI-1404
* = 1405	PMP-1405	PI-1405
* = 1406	PMP-1406	PI-1406
* = 1501	PMP-1501	PI-1501
* = 1502	PMP-1502	PI-1502
* = 1503	PMP-1503	PI-1503

2 CONTROL SCHEMATIC RAS PUMPS

REV	DATE	BY	DESCRIPTION
1	9-22-28	MGH	ADDENDUM NO. 1

DESIGNED NS
DRAWN SGS
CHECKED CLL
DATE SEPTEMBER 2022

Digitally signed by Matthew G. Hatch
Contact Info: mhatch@carollo.com
Date: 2022.09.28 15:08:42 -06'00'

REGISTERED PROFESSIONAL ENGINEER
No. 5612657
MATTHEW G. HATCH
STATE OF UTAH

carollo

South Valley
WATER RECLAMATION FACILITY
7495 South 1300 West
West Jordan, Utah 84084

SOUTH VALLEY WATER RECLAMATION
2022 VFD REPLACEMENT
INSTRUMENTATION
RAS PUMPS CONTROL SCHEMATIC

VERIFY SCALES
BAR IS ONE INCH ON ORIGINAL DRAWING
0 1"
IF NOT ONE INCH ON THIS SHEET, ADJUST SCALES ACCORDINGLY

JOB NO. 201238
DRAWING NO. IS-02
SHEET NO.
OF

LAST SAVED BY: bshepard

PROJECT NO. 201238-100000 FILE NAME: 201238IS0002.dwg

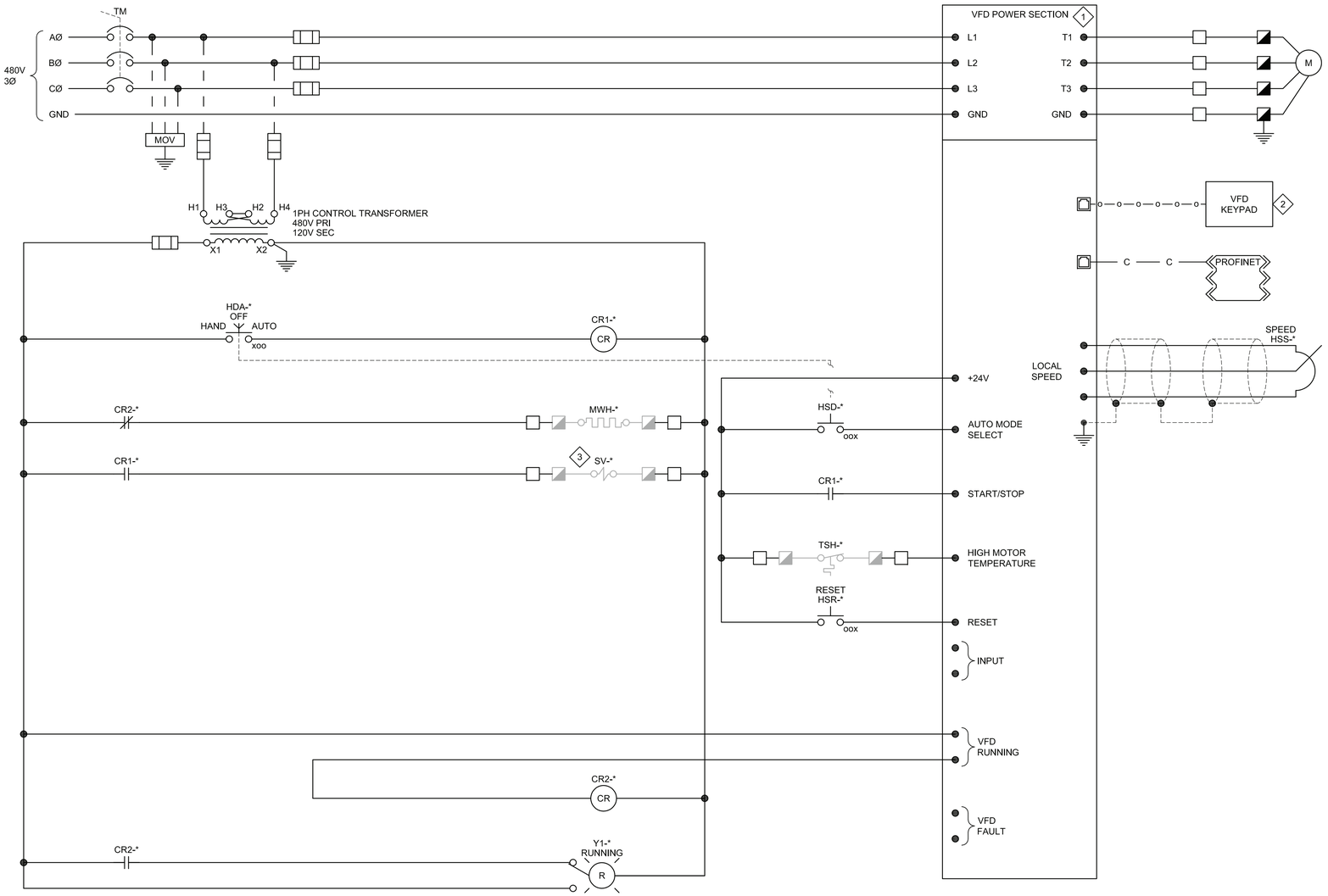

GENERAL NOTES:

1. THE SCHEMATIC SHOWS FUNCTIONALITY. REVISE THE SCHEMATIC AS REQUIRED TO PERFORM THE OPERATIONS INDICATED HERE AND DESCRIBED IN THE SPECIFICATIONS BASED ON THE MANUFACTURER'S EQUIPMENT.
2. REFER TO THE SPECIFICATIONS FOR CONTROL STRATEGIES AND VFD PROGRAMMING REQUIREMENTS.

KEY NOTES:

1. REFER TO THE ONE-LINE DIAGRAMS AND THE SPECIFICATIONS FOR VFD TOPOLOGY, INPUT AND OUTPUT DEVICES.
2. MOUNT THE KEYPAD ON THE VFD ENCLOSURE DOOR.
3. PROVIDE SEAL WATER SOLENOID INTERLOCK FOR PMP-1601, PMP-1602, AND PMP-1603. PUMPS PMP-1622 AND PMP-1623 DO NOT HAVE SEAL WATER SOLENOID

TAG	LOOP	REFERENCE DWG.
* = 1601	PMP-1601	PI-1601
* = 1602	PMP-1602	PI-1601
* = 1603	PMP-1603	PI-1603
* = 1622	PMP-1622	PI-1622
* = 1623	PMP-1623	PI-1622

3 CONTROL SCHEMATIC WAS PUMPS

REV	DATE	BY	DESCRIPTION
1	9-22-28	MGH	ADDENDUM NO. 1

DESIGNED NS
DRAWN SGS
CHECKED CLL
DATE SEPTEMBER 2022

Digitally signed by Matthew G. Hatch
Contact Info: mhatch@carollo.com
Date: 2022.09.28 14:37:42 -06'00'

REGISTERED PROFESSIONAL ENGINEER
No. 5612657
MATTHEW G. HATCH
STATE OF UTAH

carollo

South Valley
WATER RECLAMATION FACILITY
7495 South 1300 West
West Jordan, Utah 84084

SOUTH VALLEY WATER RECLAMATION
2022 VFD REPLACEMENT
INSTRUMENTATION
WAS PUMPS CONTROL SCHEMATIC

VERIFY SCALES
BAR IS ONE INCH ON ORIGINAL DRAWING
0 1"
IF NOT ONE INCH ON THIS SHEET, ADJUST SCALES ACCORDINGLY

JOB NO. 201238
DRAWING NO. IS-03
SHEET NO.
OF

LAST SAVED BY: bshepard

PROJECT NO. 201238-100000 FILE NAME: 201238IS0003.dwg